No. 17-3006

IN THE UNITED STATES COURT OF APPEALS
FOR THE THIRD CIRCUIT

JILL SIKKELEE, Individually and as Personal Representative
of the Estate of David Sikkelee, Deceased,
Appellant,

v.

PRECISION AIRMOTIVE CORPORATION; PRECISION AIRMOTIVE LLC, individually and as Successor-in-Interest to Precision Airmotive Corporation; BURNS INTERNATIONAL SERVICES CORPORATION, individually and as Successor-in-Interest to Borg-Warner Corporation, and Marvel-Schebler, a Division of Borg-Warner Corporation; TEXTRON LYCOMING RECIPROCATING ENGINE DIVISION, a Division of AVCO Corporation; AVCO CORPORATION; KELLY AEROSPACE, INC., individually and Joint Venturer and as Successor-in-Interest; KELLY AEROSPACE POWER SYSTEMS, INC., individually and as Joint Venturer and Successor-in-Interest, also known as Electrosystems, Inc., also known as Confuel, Inc.; ELECTROSYSTEMS, INC., individually and as Joint Venturer and as Successor-in-Interest, also known as Consolidated Fuel Systems, Inc., also known as Confuel, Inc.; CONSOLIDATED FUEL SYSTEMS, INC., also known as Confuel, Inc.

On Appeal from the United States District Court
for the Middle District of Pennsylvania (No. 4:07-cv-00886-MWB)

BRIEF FOR APPELLANT AND
JOINT APPENDIX VOLUME 1,
PAGES JA1-JA164

Tejinder Singh
GOLDSTEIN & RUSSELL, P.C.
7475 Wisconsin Avenue
Suite 850
Bethesda, MD 20814
(202) 362-0636

David I. Katzman
KATZMAN LAMPERT
100 West Big Beaver Road
Suite 130
Troy, MI 48084
(248) 258-4800

Counsel for Appellant Jill Sikkelee

TABLE OF CONTENTS

TABLE OF AUTHORITIES

Cases

Statutes

Regulations

Other Authorities

INTRODUCTION

This is a state-law products liability case at the summary judgment stage. Plaintiff Jill Sikkelee claims that defendant AVCO Corporation, on behalf of its Lycoming Engines Division (Lycoming) designed a defective aircraft engine and concealed that defect for decades—causing the death of Jill's husband David. Jill sued, alleging strict liability for a design defect and negligence, including failure to notify the Federal Aviation Administration (FAA) of a known defect.

In 2014, the district court held that federal standards of care preempted the field of aviation product design, and further held that because Lycoming had received a "type certificate"—a design approval issued by the FAA—its compliance with federal standards was conclusively established. This Court unanimously reversed, holding that state standards of care apply. *See Sikkelee v. Precision Airmotive Corp.*, 822 F.3d 680, 683 (3d Cir.), *cert. denied*, 137 S. Ct. 495 (2016). The Court explained that its decision "maintain[ed] the status quo that has existed since the inception of the aviation industry, preserving state tort remedies for people injured or killed in plane crashes caused by manufacturing and design defects." *Id*. at 707.

The Court also recognized the potential for a new conflict preemption defense, and it declined to rule on Lycoming's state-law arguments (which had been rejected by the district court). On remand, the district court granted summary judgment to

Lycoming on conflict preemption grounds, and reversed itself to rule in Lycoming's favor on the state-law questions too.

The preemption holding is unprecedented. If affirmed, almost every aviation design defect claim will be preempted. That result is incompatible with this Court's admonition that courts should not hold, "that the mere issuance of a type certificate exempts designers and manufacturers of defective airplanes from the bulk of liability for both individual and large-scale air catastrophes." *Id*. at 696. It also violates bedrock principles of preemption law.

The district court's *volte face* on the state law questions is less striking, but equally wrong. Effectively, the court held that because Lycoming's co-defendant Kelly Aerospace overhauled the carburetor, Lycoming could not be liable for design defects—even though the overhauled carburetor was installed on an engine that Lycoming built, and even though Kelly followed Lycoming's design, as well as its defective service instructions, in all material respects when it overhauled the carburetor. Under Pennsylvania law, these questions should have gone to the jury.

Finally, the district court erred in holding that Lycoming had no duty to notify the FAA of defects in its design.

JURISDICTIONAL STATEMENT

The district court had jurisdiction under 28 U.S.C. § 1332. This appeal is from final judgment entered August 31, 2017. JA162. Sikkelee timely appealed on September 12, 2017. JA163. This Court has jurisdiction pursuant to 28 U.S.C. § 1291.

STATEMENT OF THE ISSUES PRESENTED FOR REVIEW

1. Whether Lycoming is entitled to summary judgment on conflict preemption grounds.[1]

2. Whether Lycoming is entitled to summary judgment on state law grounds with respect to Sikkelee's strict liability and negligence claims.[2]

3. Whether Lycoming is entitled to summary judgment against the claim that it breached a duty to notify the FAA of known design defects.[3]

---

[1] This issue was briefed (Dkts. 545-47, 564), argued (JA1362 ((Dkt. 562)), and ruled upon (JA39 (Dkt. 565); JA154 (Dkt. 566)).

[2] This issue was briefed (Dkts. 234-35, 268-69, 296, 537-38), argued (JA1362 (Dkt. 562)), and ruled upon (JA1 (Dkt. 299); JA39 (Dkt. 565); JA154 (Dkt. 566)).

[3] This issue was briefed (Dkts. 498, 522, 527) and ruled upon (JA1 (Dkt. 299); JA156 (Dkt. 567)).

STATEMENT OF RELATED CASES

This Court reversed the district court's prior partial grant of summary judgment to Lycoming. *Sikkelee v. Precision Airmotive Corp.*, 822 F.3d 680 (3d Cir.), *cert. denied*, 137 S. Ct. 495 (2016). We are not aware of any other related case.

STATEMENT OF THE CASE

I. Legal Background

Here we provide background about the relationship between federal aviation law and state tort law. We then describe the FAA's design approval processes and the processes for changing approved designs or altering individual aircraft.

A. Federal Aviation Law and State Tort Claims

This case involves state tort claims relating to "general aviation" products. "General aviation" encompasses essentially all aviation that is neither commercial nor military—the archetype is a single-engine plane, flown by a private pilot.

Congress confirmed that type certificated general aviation products are subject to state tort law when it enacted the General Aviation Revitalization Act of 1994 (GARA), Pub. L. No. 103-298, 108 Stat. 1552, *reprinted in* 49 U.S.C. § 40101 note. Thus, the House Report accompanying GARA explains that "[t]he liability of general aviation aircraft manufacturers is governed by tort law . . . While the specific contours have ebbed and flowed, the public's right to sue for damages is ultimately

grounded in the experiences of the legal system and values of the citizens of a particular State." H.R. Rep. No. 103-525, pt. 2, at 3-4 (1994) (House Report).

Manufacturers complained that excessive liability threatened their viability. Bills were introduced that would have addressed the matter comprehensively by "establishing uniform standards on a number of issues, including joint and several liability, standards of liability, statutes of repose, and punitive damages." House Report, pt. 1, at 1-2. These bills died in committee. *Id*. at 2. Congress thus enacted a much narrower bill, "limited to one issue, a statute of repose." *Id*. Congress sought to "strike[] a reasonable balance between the sometimes conflicting objectives of keeping the price of general aviation aircraft at an affordable level and awarding fair compensation to persons injured in general aviation accidents." *Id*. at 4.

The balance Congress struck was specific. GARA provides that with some exceptions, "no civil action for damages . . . arising out of an accident involving a general aviation aircraft may be brought against the manufacturer . . . if the accident occurred" more than eighteen years after the aircraft was delivered or a defective component was installed. GARA §§ 2(a), 3(3).

The statute preempts "any State law to the extent that such law permits a civil action described in subsection (a) to be brought after the applicable limitation period for such civil action established by subsection (a)." GARA § 2(d). This preemptive effect was intended to be "extremely limited." House Report, pt. 2, at 6. Respect for

federalism and common law tradition had caused Congress "to tread very carefully when considering proposals . . . that would preempt State liability law." *Id*. at 4. After considering the costs of tort liability, as well as the substantial federal regulatory oversight of the industry, "the Committee voted to permit, in this exceptional instance, a very limited Federal preemption of State law." *Id*. Congress was clear, however, that "in cases where the statute of repose has not expired, State law will continue to govern fully, unfettered by Federal interference." *Id*. at 7.

Since the enactment of GARA, Congress has not revisited the question of tort liability in general aviation cases. Thus, aside from GARA, no statute expressly addresses the question.

B. The FAA's Design Approval Procedures

The FAA approves the design of certain products and articles for use in aircraft, and has procedures allowing manufacturers to change those designs.

The first relevant approval is a "type certificate"—a design approval. Before an aircraft, engine, or propeller can be mass-produced, it must have one of these. The manufacturer submits an application including test results, drawings, and other data to the FAA, representing that the design complies with the "regulations and minimum standards prescribed under" the Federal Aviation Act. 49 U.S.C. § 44704(a)(1). The Supreme Court has described the FAA's role in this process as a "spot check" of the application. *United States v. S.A. Empresa de Viacao Aerea Rio*

Grandense (Varig Airlines), 467 U.S. 797, 817 (1984). If that check reveals no issues, the FAA issues a type certificate.

Certificated designs can be changed, and frequently are. If a type certificate holder wishes to do so, the first step is to determine whether the change is "minor" or "major."[4] The responsibility to make this determination rests, in the first instance, with the type certificate holder. *See* FAA Order 8110.37F, at 4-4, 4-16 (2017). If the holder determines that the change will be "minor," then "no FAA project is necessary." *Id*. at 4-4. Instead, the FAA "permits a wide latitude in the approval process," FAA Order 8110.4C, at 87 (2017), typically allowing the type certificate holder to implement the change "before submitting to the FAA any substantiating or descriptive data," 14 C.F.R. § 21.95. Minor changes are common. For example, one manufacturer reviewed approximately 2000 minor changes each year.[5] Of course, the FAA has the power to disagree with a manufacturer's decision that a change is

---

[4] A "minor change" has "no appreciable effect on the weight, balance, structural strength, reliability, operational characteristics, or other characteristics affecting the airworthiness of the product." 14 C.F.R. § 21.93(a). Other changes are "major." *Id*.

[5] *See* 14 CFR Part 23 Reorganization Aviation Rulemaking Committee, *Recommendations for Increasing the Safety of Small General Aviation Airplanes Certificated to 14 CFR Part 23*, at 22 (2013), https://www.faa.gov/about/office_org/headquarters_offices/avs/offices/air/directorates_field/small_airplanes/media/P23_Reorg_ARCFINAL.pdf.

"minor." But the manufacturer is not required to obtain an official determination before implementing the change.

Major changes require an application, including a showing that the changed product will comply with the FAA's requirements. 14 C.F.R. § 21.97. Major changes also typically require FAA involvement. But even a major change can be approved quickly, and applications frequently are approved as a matter of course. As an illustration, Lycoming has amended the type certificate for the O-320 engine dozens of times to add new variants. The majority of those applications were approved in less than a month. Some were approved in less than a week. JA561.

Separate from the type certification process, the FAA also furnishes parts manufacturer approvals (PMAs). These allow the holder to manufacture and sell replacement articles (*i.e.*, component parts) for use on certificated products. A PMA applicant can obtain approval either by showing that the proposed articles are identical to the type certificate holder's articles, or by showing, through tests and computations, that the articles meet the applicable airworthiness requirements because they perform as well as the type certificate holder's articles. *See* 14 C.F.R. § 21.303(a). The process for changing a PMA design is similar to the process for changing a type design: the design must be classified as minor or major; minor changes can be approved using any method acceptable to the FAA, while major changes require FAA approval. *See id*. § 21.319.

Next, "alterations" are not design changes, but instead physical alterations to individual aircraft, engines, etc., usually done by a certified mechanic or repair station. *See* 14 C.F.R. § 43.3. Alterations can be minor or major. 14 C.F.R. § 1.1 (defining major and minor alterations). For present purposes, it is enough to know that the person performing an alteration decides in the first instance whether the alteration is major by deciding whether it will have an "appreciable" effect on certain product characteristics, and that any alteration that is approved in a product's specifications is automatically minor. *See id.*[6]

If an alteration is minor, then the applicant (*e.g.*, the mechanic or repair station) can perform the alteration without "FAA-approved data" or FAA approval. FAA Order 8300.16, at 3 (2015); *see also id.* at 2. Indeed, there is no need to even inform the FAA; it is enough to document the alteration in the maintenance records. JA59. Even major alterations can be implemented without prior FAA approval if the "technical data" has previously been approved. *Id.*; *see also* FAA Order 8300.16, at 3. "Technical data" means "the drawings, specifications, and other material that provide the description and substantiation of an aircraft repair or alteration."

---

[6] The FAA has published lists of major alterations. *See* 14 C.F.R. pt. 43 app. A(a)(2) (major alterations to engines); FAA, Major Repair and Alteration Data Approval 48-51 (2017), http://fsims.faa.gov/Wdocs/Other/Major_Repair_Alteration_Job-Aid%20R5.pdf (same).

FAA Order 8300.16, at 13. "Previously approved" data includes airworthiness directives, "[designated engineering representative (DER)]-approved data," "Service Bulletins . . . or similar documents," and "[m]aintenance manuals issued by design and production approval holders." *Id*. at 15-16. When such data is available, "further review or approval of that data would not be necessary." *Id*. at 14.

A final important point relates to the role of DERs in the design approval and change process. DERs are members of the private sector, typically employed by manufacturers, although they can also be independent consultants. These individuals apply to the FAA to act as its designees. Although the DER "represents the FAA," the DER "is not an employee of the FAA . . . and is not federally protected for the work done or the decisions made as a DER. As a private individual, a DER is subject to general tort law," and indemnified, if at all, by the manufacturer that employs her. FAA Order 8110.37F, at 3-1.

The FAA can specify limitations on a DER's authority, but a fully empowered DER can approve drawings, test results, and any other data necessary to certify a product. *See id.* at 2-4. DERs also play a substantial role in approving changes and alterations. Thus, although DERs are not necessarily required to review data supporting a minor change to a certificated design, if a type certificate holder determines that the data supporting a minor change requires approval, it can use a DER to approve the data instead of submitting the data to the FAA. *See id*. at 4-4.

Similarly, while a DER is not required (or even permitted) to approve minor alterations to an aircraft, *id*. at 4-8, DER-approved data is sufficient to support major alterations, *id*. at 2-2, 2-6. Moreover, an applicant considering an alteration can employ a DER "prior to involving the FAA," and if "the applicant has determined that the DER has provided all the approved data necessary for the repair or alteration, then no [FAA] field approval is required." FAA Order 8300.16, at 39.

II. Factual Background

This case is at the summary judgment stage. The facts described below are what a reasonable factfinder could find, resolving ambiguities and drawing factual inferences in Sikkelee's favor.

A. Lycoming Adopts a Defective Engine Design.

Lycoming designed, manufactured, and sold a defective aircraft engine (model O-320). The engine is defective because the carburetor (model MA-4SPA) comes apart due to engine vibration. JA1196 (Pl. statement of facts (SOF)); JA714 (Pl. Expert Sommer testimony); JA1662 (Lycoming e-mail). That happens because Lycoming decided that the four screws mating the throttle body and the float bowl (the two main pieces of the carburetor) should be secured using lock tab washers—a kind of fastener that uses small metal tabs to hold the screw head in place. JA538 (photo); JA1308 (Pl. SOF); JA1620-21 (Lycoming change order). Engine vibration causes these tabs to relax their hold on the screws, which then allows the screws to

loosen. JA541 (Sommer Report). The problem is aggravated by Lycoming's choice of gasket materials, which do not spring back to their original shape after compression. JA541-42 (Sommer Report); JA473 (Pl. Expert McSwain Report). Once the screws are loose, the two halves of the carburetor separate. That separation causes fuel to leak and air to enter the carburetor, preventing the carburetor from delivering the proper mixture of fuel and air to the engine, resulting in a loss of power. JA524 (Sommer Report).

There are other ways to secure these screws. One is to use safety wire, which is a wire run through the head of each screw that causes the screws to hold each other in place. JA542 (Sommer Report). In 1963, Marvel-Schebler, the carburetor manufacturer and predecessor to defendant Precision Airmotive, began requiring safety wire to address this specific problem, JA1317-18; Lycoming did too, JA1623, and it worked. In fact, the FAA then mandated safety wire on MA-4SPA carburetors. *See* 29 Fed. Reg. 16,317, 16,318 (Dec. 5, 1964). But at Lycoming's urging, JA1681, the FAA removed that requirement and the choice of attachment method was left to manufacturers' discretion. JA1684; *see also* JA1307-08 (setting forth correspondence in more detail).

Starting in 1965, Lycoming chose lock tab washers—a cheaper alternative. Lycoming implemented that change using an "Engineering Change Order." JA1620-21. The only form of FAA approval on that order was the signature of Lycoming's

DER. JA1622. Lycoming then included the lock tab washer feature in its design and maintenance instructions for the carburetor going forward. *E.g.*, JA1603 (carburetor design drawing with note requiring lock washers); JA567 (service bulletin).

B. Lycoming Learns of the Defect.

No later than 1971, Lycoming knew that its design was defective. The FAA contacted Lycoming in 1971 and again in 1972 because reports of malfunctions in MA-4SPA carburetors installed on Lycoming O-320 engines had poured in from the field. In a 1972 letter, the FAA referenced its prior letter which listed sixteen incidents of body-to-bowl screw loosening. The letter confirmed that such reports "are still being received," and that the "majority of the incidents occurred" on "Cessna 172 model aircraft." The letter noted that "[t]o date, we have forwarded to your office 45 Malfunction or Defect Reports on this subject." The FAA urged Lycoming to provide comments "as to any action you may propose that will help in alleviating this problem." JA557.

Also in 1972, the FAA issued a memorandum explaining that "Marvel Schebler carburetors are a part of the engine type design and are not approved separately. The type certificate holder is responsible for the type design and also the correction of service problems." JA579.

Lycoming responded in 1973 by issuing Service Bulletin 366 (SB366). The bulletin, approved by Lycoming's DER, advised readers during inspection to check

body-to-bowl screws for looseness, and to reassemble the carburetor if fuel leakage was evident on the bowl. JA567. Numerous witnesses stated that SB366 was not adequate to fix the problem—and that the guidance in the bulletin could actually make it worse because the process of checking the screws could itself damage the lock tab washers, thus leading to loosening in the future. JA548-49, JA554 (Dep. Lycoming Employee Moffett); JA608-09 (Dep. Precision Employee Hall); JA468 (McSwain Report); JA499 (Pl. Expert Twa Report); JA533-34 (Sommer Report). Lycoming did not change its design.

This design defect continued to cause problems, as shown by service records. *E.g.*, JA1309 (Pl. SOF); JA1665-71 (database reports of carburetor failures). In 2004, employees at Lycoming's codefendant Precision Airmotive, the carburetor manufacturer, wrote two letters to Lycoming. The first explained that based on a review of the FAA's service difficulty report database, Precision had "identified a trend that we feel you should be made aware of," *i.e.*, of "loose bowl to body attach screws on the MA-4SPA model carburetor." The letter reported that "a significant percentage of the incidents were on the Cessna 172 aircraft." Precision requested that Lycoming, "as the type certificate holder, review the [service difficulty report] information and the installation to determine if some action is required." JA581. Later that year, Precision sent a note to Lycoming stating that "there continue to be reports of loose screws on certain carburetors, particularly those used on O-320

engines in Cessna 172 aircraft." The letter also noted the risk of liability, and urged Lycoming to consider "the pros and cons of a different attachment system." JA582-83.

Lycoming still did not change the design, and it did not report to the FAA that its design was causing problems including engine failure.

C. David Sikkelee's Plane Crashes.

The engine at issue in this case is model O-320-D2C. This variant was certified in 1966. JA561. The specific engine shipped in 1969 with an MA-4SPA carburetor incorporating the lock tab washer design. The engine was placed in long-term storage and installed "factory new" on a Cessna 172N aircraft in 1998. JA616.

In 2004, the engine was overhauled. The carburetor was overhauled by Lycoming's codefendant Kelly Aerospace. JA425-26. In addition to being a repair station, Kelly is a PMA holder for certain parts of the MA-4SPA carburetor. To obtain that approval, Kelly's predecessor performed tests and computations whereby it substituted its parts—intended to mimic Precision's original equipment manufacturer (OEM) parts—for those OEM parts in a carburetor and ran that carburetor on an engine. *See* JA1686 (illustrative example of tests); JA1693 (same); JA1688-89 (Lycoming drawing used by Kelly's predecessor to describe how tested parts fit in Lycoming design). The tests showed that the PMA parts had the same form, fit, and function as the OEM parts, and therefore constituted acceptable

substitutes in a Lycoming engine. JA1137-40 (setting forth chronology of Kelly approvals); JA1673-79 (approved drawings of Kelly PMA parts).

In overhauling the carburetor, Kelly used a combination of OEM parts and its PMA parts—including PMA versions of the hex screws, lock tab washers, and gaskets—to implement Lycoming's design. JA417-19; JA1304. Kelly also followed Lycoming's and Precision's applicable service literature—referenced in Lycoming's engine overhaul manual. JA517 (Sommer Report); JA571 (Kelly records); JA575 (same); JA1304-05 (Pl. SOF). Lycoming admitted that the design of the overhauled carburetor was the same as Lycoming's own design. JA941. It further admitted that Kelly's "replacement parts had the same form, fit, and function, and performed in a manner identical to, the same parts that were on the MA-4SPA model carburetor approved by the FAA for use on the Engine." JA1137 (Lycoming Rule 56.1 Statement). Thus, none of the differences between the parts would "have changed the design of the carburetor throttle body to float bowl retention system or its resistance to vibratory forces." JA518 (Sommer Report).

After the overhaul, the plane was returned to service. David Sikkelee rented the plane on July 10, 2005. It crashed shortly after takeoff. A post-accident investigation by Sikkelee's experts revealed that the throttle body had come loose from the float bowl during flight, resulting in a loss of engine power and the subsequent crash. JA449-50, JA451-52, JA472-74 (McSwain Report); JA536, JA541, JA543 (Sommer

Report). The crash caused a fire that killed David and seriously injured his passenger. David is survived by his widow Jill, the plaintiff in this case, and five children.

Around the time of the crash, Lycoming employees discussed internally how to revise SB366, implicitly acknowledging the need to modify that service instruction. JA1632-59 (draft revisions to SB366). The bulletin was updated in 2007, two years after David's accident. JA599-600. Lycoming employees also admitted that the potential loosening of the screws on the MA series carburetor is due to engine parts reacting to normal engine vibration. JA1662.

III. Procedural History

A. Prior to the First Appeal

This lawsuit began in 2007. JA176. In 2010, the district court held that federal standards of care preempted state ones, and the case was re-pleaded under those standards, alleging strict liability and negligence. JA219; JA265.

In 2012, the district court largely denied Lycoming's motion for summary judgment. The court granted the motion "to the limited extent that Plaintiff's claims may be construed to allege a defect in the engine in 1969," stating that "Plaintiff has offered no evidence . . . demonstrating that the engine was defective when it left the Lycoming's Williamsport manufacturing plant in 1969 or that a defect existing at that time caused the 2005 aircraft accident." JA13.

The motion was otherwise denied. The court held that a reasonable jury could find that Lycoming was a de facto manufacturer of the overhauled carburetor because its design and instructions caused Kelly to overhaul the carburetor the way it did. The court held that there was "abundant evidence" that Lycoming's design "was the cause of the accident," and that "alternative designs were feasible and contemplated." JA25-27. The court also held that a reasonable jury could find that Lycoming failed to warn because its instructions and manual contained no warning of the defect, and Lycoming did not report the defect to the FAA.

Lycoming unsuccessfully attempted an interlocutory appeal, and unsuccessfully sought reconsideration—twice. *Sikkelee v. Precision Airmotive Corp.*, 2012 WL 5077571 (3d Cir. Oct. 17, 2012); JA645; JA676-78. Then, on the eve of trial, the district court found itself unsatisfied with the proposed jury instructions. The court urged Lycoming to file a new summary judgment motion arguing that its receipt of a type certificate conclusively established its compliance with federal standards of care, thus precluding liability altogether. JA1066-67.

Lycoming filed the motion, and the court granted it with respect to all of Sikkelee's claims except her claim that Lycoming had failed to notify the FAA of known defects as required by 14 C.F.R. § 21.3. JA1122. Lycoming moved for reconsideration (Dkt. 497), but proceedings on that motion were stayed during Sikkelee's interlocutory appeal.

B. This Court Rules in Sikkelee's Favor.

On appeal, Sikkelee argued that a type certificate does not absolve a manufacturer of liability, and that federal law does not preempt state standards of care. This Court agreed. It found against field preemption because "the Federal Aviation Act, [GARA], and the regulations promulgated by the [FAA] reflect that Congress did not intend to preempt aircraft products liability claims in a categorical way." *Sikkelee*, 822 F.3d at 683. The Court also rejected the conclusion that "because there is no federal standard of care for these claims in the statute or regulations, the issuance of a type certificate must both establish and satisfy that standard." *Id*. at 695. Instead, the Court held that "subject to traditional principles of conflict preemption, including in connection with the specifications expressly set forth in a given type certificate, aircraft products liability cases like Appellant's may proceed using a state standard of care." *Id*. at 683.

The Court's reference to conflict preemption was prompted by an invitation brief filed by the FAA after oral argument. The FAA argued that field preemption applied and also that a type certificate could, under some circumstances, give rise to conflict preemption with respect to "an aspect of the aircraft's design that was expressly approved by the FAA as shown on the type certificate, accompanying operating limitations, underlying type certificate data sheet, or other form of FAA approval incorporated by reference into those materials." *Id.* at 702. In response, this

Court held that "because the type certification process results in the FAA's preapproval of particular specifications from which a manufacturer may not normally deviate without violating federal law, the type certificate bears on ordinary conflict preemption principles." *Id*. However, the court did not "demarcate the boundaries of those tort suits that will be preempted as a result of a conflict between state law and a given type certificate, nor which FAA documents incorporated by reference in a type certificate might give rise to such a conflict." *Id*. It left those issues for the district court to consider.

The Court's opinion caused some confusion because it adopted a rule that no party had urged—rejecting field preemption while opening the door to a novel conflict preemption defense without defining its contours. Throughout the Court's opinion, however, it gave the clear implication that the preemptive effect of a type certificate should be narrow.

Thus, the Court explained that when it enacted the Federal Aviation Act, Congress did not "change the preemptive effect of the type certification process"—which had never before resulted in preemption. The Court also emphasized that "the acquisition of a type certificate is merely a baseline requirement" reflecting "minimum standards." *Id.* at 694. And it stated that there was no "clear evidence that Congress intended the mere issuance of a type certificate" to "exempt[] designers and manufacturers of defective airplanes from the bulk of liability for both

individual and large-scale air catastrophes." *Id*. at 695-96. The Court also cited GARA, which "reinforces what is now apparent: Federal law does not preempt state design defect claims. Rather, Congress left state law remedies in place when it enacted GARA in 1994, just as it did when it enacted the Civil Aeronautics Act in 1938 and the Federal Aviation Act in 1958." *Id*. at 696-97.

Finally, the Court expressly disclaimed any intent to "effect a sea change" in the law. *Id*. at 707. The Court instead explained that its holding "simply maintains the status quo that has existed since the inception of the aviation industry, preserving state tort remedies for people injured or killed in plane crashes caused by manufacturing and design defects. That status quo leaves intact the traditional deterrence mechanism of a state standard of care, with attendant remedies for its breach," and thereby promotes "aviation safety." *Id*.

Resolving the appeal, the Court reversed and remanded with instructions for further proceedings.

C. The District Court Rules for Lycoming on Remand.

On remand, Lycoming filed motions for summary judgment on the grounds of conflict preemption (Dkt. 532) and state law (Dkt. 523); it also reminded the district court of its pending motion for reconsideration regarding the claim for failure to notify the FAA of defects. The parties had oral argument, but no additional discovery or factual development on the motions.

The district court ruled in Lycoming's favor on all three motions. The 115-page opinion is unusual in that it did not even pretend to confine itself to the factual and legal arguments presented in the parties' motion papers. Rather, the court appears to have decided the case based on its own intuitions about conflict preemption and state law, drawing inspiration, argument, and evidence from the entire docket and the Internet.

Sikkelee appealed from final judgment.

SUMMARY OF ARGUMENT

This Court should reverse the decision below.

I.A. Lycoming is not entitled to summary judgment on conflict preemption grounds. A threshold question is whether the specific design features at issue in this case were "expressly approved" by the FAA during type certification. The challenged aspects of Lycoming's design—the use of lock tab washers and the choice of gasket materials—do not have the FAA's express approval, and so its defense fails at the threshold.

B. Lycoming's affirmative defense also fails because Lycoming has not shown that it was impossible for it to comply with both federal and state law. For this case, we propose the following rule: When a defendant can implement a change or alteration to a design, product, or article without first seeking approval from an employee of the FAA, a state-law claim requiring that change is not preempted

unless the defendant proves with clear evidence that the FAA would reject the change or alteration. This rule tracks controlling preemption precedent while accounting for important features of the general aviation industry and regulatory landscape, including but not limited to the role of DERs, who are employed by the manufacturer and can approve many changes on the FAA's behalf.

Under this rule, Lycoming is not entitled to summary judgment. Lycoming has not introduced any evidence that it would require approval from an FAA employee before changing its engine design to comply with state law, nor has it provided any evidence that the FAA would reject such a change. In fact, the FAA has previously approved the modification we propose—the use of safety wire—for this precise carburetor.

Even applying a very stringent standard, under which preemption arises unless a manufacturer can act without any prior regulatory approval (even approval granted by its own employees), Lycoming is not entitled to summary judgment because it has not shown that it would be unable to use that procedure. Some minor design changes can be implemented without any FAA input, and other variants of the O-320 engine that use different carburetors or fuel injection have already been approved, which means that Lycoming can already sell O-320 engines that comply with state law.

There also is no merit to Lycoming's argument that Kelly was prohibited from using different parts. If Lycoming had changed its design, Kelly—a repair station—could have implemented that change as a minor or approved alteration.

C. In the alternative, this Court should consider revisiting its decision to open the door to conflict preemption in general aviation cases. No party in the prior appeal asked for this defense, and the lower court's sweeping decision illustrates the dangerous potential in allowing it. Type certification and tort claims have coexisted for more than 80 years without conflict preemption, and aside from the small step it took in GARA, Congress has not seen fit to alter that status quo. Rather than attempt to develop a new set of rules and applications in an area of the law that is complex and shifting, it would be better to allow Congress to define the scope of preemption through legislation.

II.A. Lycoming is not entitled to summary judgment on state law grounds either. First, this Court should reverse the district court's 2012 decision holding that the engine was not defective when it left Lycoming's possession in 1969. The engine then incorporated the faulty design aspects challenged here, and a jury was entitled to find that this made the engine defective under either the consumer expectations or the risk-utility test set forth in *Tincher v. Omega Flex, Inc.*, 104 A.3d 328 (Pa. 2014). The engine then reached David Sikkelee in substantially the same condition: the mere replacement of one defective carburetor with a functionally identical defective

carburetor changed nothing. And when it reached him, there is enough evidence to allow a reasonable jury to conclude that the defect caused the crash.

B. Independently, Lycoming is strictly liable and liable in negligence for defects in the overhauled carburetor. Lycoming chose to design the carburetor this way. Lycoming chose to ignore decades of data indicating that its design was defective. Lycoming issued inadequate service documents and maintenance instructions. And Kelly followed Lycoming's design in building the carburetor. It is entirely reasonable to treat Lycoming as the de facto manufacturer of the carburetor, or to hold that in the circumstances of this case, Lycoming's role as a designer exposes it to strict liability. Similarly, a reasonable jury could hold Lycoming liable in negligence, as a reasonable manufacturer in its position would have changed the design.

C. Lycoming also is liable for failure to notify the FAA of known defects in its engine. This duty is set forth in 14 C.F.R. § 21.3, which, among other things, requires a type certificate holder to report any defect that either has caused or could cause an engine failure. It is undisputed that Lycoming never self-reported its defective design to the FAA. Had it done so, there is good reason to think that the FAA would have acted: the FAA indicated that it was concerned about this problem and looking to Lycoming to respond; and the easiest solution (safety wire) had been implemented (and required by the FAA) before.

STANDARD OF REVIEW

Review of the district court's summary judgment decision is de novo. *Sikkelee*, 822 F.3d at 687.

ARGUMENT

I. Lycoming Is Not Entitled To Summary Judgment On Conflict Preemption Grounds.

Conflict preemption is an affirmative defense, on which the defendant bears "the burdens of production and persuasion." *In re Fosamax (Alendronate Sodium) Prods. Liab. Litig.*, 852 F.3d 268, 295 (3d Cir. 2017), *petition for cert. filed*, No. 17-290 (Aug. 22, 2017). In the prior appeal, this Court stated that the defendant must show that the challenged feature of the design was "expressly approved by the FAA" during the type certification process. *Sikkelee*, 822 F.3d at 702. The Court further explained that the defendant cannot carry its burden unless it shows that it could not change that feature of the design without prior FAA approval, such that simultaneous compliance with state and federal law was impossible. *See id.* at 703. At summary judgment, Lycoming has not carried its burden with respect to either requirement.

A. The Challenged Features of Lycoming's Design Were Not Expressly Approved by the FAA as Shown on the Type Certificate.

Conflict preemption can only arise when the "'plaintiff challenges an aspect of an aircraft's design that was expressly approved by the FAA as shown on the type certificate, accompanying operating limitations, underlying type certificate data

sheet, or other form of FAA approval incorporated by reference into those materials.'" 822 F.3d at 702 (quoting the FAA).[7] This is a threshold requirement because only the FAA's express approvals embody the agency's judgment that a product *must* be built in a particular way, to the exclusion of other options. But, "'to the extent that the FAA has not made an *affirmative determination with respect to the challenged design aspect* . . . the claim would not be preempted.'" *Id*. (emphasis added).

Importantly, the FAA identified the type certificate, the type certificate data sheet, and the operating limitations—all documents that the FAA itself creates—as places to look for express approvals. *See id*. Looking elsewhere is inconsistent with this Court's repeated admonitions that preemption should be applied narrowly, and with the FAA's position that "the mere issuance of a type certificate does not preempt all design defect claims concerning the certificated part," but "specifications expressly embodied in a type certificate may, in a given case, preempt such claims." *Id*. at 699.

---

[7] The district court expressed doubt whether "express approval" is required. JA109 n.23. However, this Court referenced that requirement multiple times. *See* 822 F.3d at 683, 699, 702.

Here, the "challenged design aspect[s]"—the lock tab washers and faulty gaskets—are not mentioned on any FAA document. *Id*. Lycoming's defense therefore fails at the threshold.

Lycoming did not even argue below that the FAA expressly approved this feature of its design during type certification. Instead, Lycoming made two arguments. First, that by approving Kelly's PMA articles (the screw, lock tab washer, and gasket), the FAA also approved Lycoming's design. JA1164. That cannot be right. Kelly's PMA does not bind Lycoming; that approval therefore cannot support Lycoming's impossibility defense because it does not impose any federal duty on Lycoming that might conflict with a state-law duty. Moreover, the purpose and effect of PMA approval was not to establish that Lycoming's design was airworthy. Instead, it was to establish that Kelly's PMA articles functioned in a manner comparable to the OEM parts. Thus, the FAA approved Kelly's PMA articles—the screws, washers, and gaskets—separately and over a period of years. JA1137-39 (describing approvals of the articles in 1987, 1990, and 1998). But the FAA never commented on whether those articles collectively constitute an expressly approved attachment mechanism. To be sure, the approvals may have rested on the assumption that Lycoming's original design was airworthy. But an implicit assumption is not an express approval.

Previously, Lycoming argued that the regulatory definition of a "type certificate" includes the "type design." 14 C.F.R. § 21.41. The "type design," in turn, includes all applicable drawings of each and every component. *Id*. § 21.31(a). Therefore, Lycoming argued, every drawing is "expressly approved" when the certificate is granted. It simply cannot be true, however, that by conducting a "spot check" of the stack of data submitted by the manufacturer, *United States v. S.A. Empresa de Viacao Aerea RIO Grandense (Varig Airlines)*, 467 U.S. 797, 817 (1984), the FAA has "expressly approved" every jot and tittle of every drawing in that stack. That would lead to sweeping preemption, contrary to this Court's decision. The better rule is to limit preemption to approvals listed on FAA documents.

B. Lycoming Has Not Shown That It Was Impossible for It to Comply with Both State and Federal Law.

The FAA's express approval is only the first step of the analysis. A defendant must also show that the approval made it impossible to comply with both federal and state law. Lycoming's defense fails because it has not made that showing.

1. Under the Correct Legal Rule, Sikkelee's Claims Are Not Preempted Because Federal Law Permitted Lycoming to Change Its Design.

Before considering the facts of this case, we discuss the appropriate legal rule. This Court's prior opinion did not articulate a specific rule, but instead held that "ordinary conflict preemption principles" apply, and cited the Supreme Court's

precedents relating to preemption of drug label claims. 822 F.3d at 702-03. Those cases fall at opposite ends of a spectrum.

On one end lies *Wyeth v. Levine*, 555 U.S. 555, 573 (2009), which held that state tort claims challenging the adequacy of a brand-name drug's label were not preempted because a federal regulation, known as the Changes Being Effected (CBE) regulation, allows manufacturers to unilaterally change their labels in certain ways while a request for regulatory approval was pending. The change remained subject to Food and Drug Administration (FDA) approval: if the FDA did not accept the change, the manufacturer would have to unwind it. But the Supreme Court held that "absent clear evidence that the FDA would not have approved a change . . . we will not conclude that it was impossible for Wyeth to comply with both federal and state requirements." *Id*. at 571.

In *Fosamax*, this Court analyzed *Wyeth*'s "clear evidence" standard, holding that it constitutes "a standard of proof." 852 F.3d at 284. The Court further held that "the question of whether the FDA would have rejected a proposed label change is a question of fact that must be answered by a jury." *Id*. at 286. And because impossibility preemption is an affirmative defense, "the question for summary judgment purposes is . . . whether a reasonable juror could find that it is *highly probable* that the FDA would have rejected the warning." *Id*. at 295.

On the other end of the spectrum lie *PLIVA, Inc. v. Mensing*, 564 U.S. 604 (2011), and *Mutual Pharmaceutical Co. v. Bartlett*, 133 S. Ct. 2466 (2013), which found state law claims challenging the adequacy of a generic drug's label were preempted. The Supreme Court explained that unlike brand-name manufacturers, generic manufacturers do not have the authority to alter their labels under the CBE regulation. Instead, federal law requires them to match the label of their brand-name counterparts. Thus, the only way for the generic manufacturers to alter their label was to ask the FDA to negotiate with brand-name manufacturers to alter the corresponding brand-name label—kicking off a complex, multi-step "Mouse Trap game," *PLIVA*, 564 U.S. at 619, and there was "no evidence of any generic drug manufacturer ever" even attempting to do so, *id*. at 617. Based on that fact pattern, the Court found preemption. It explained:

> Before the Manufacturers could satisfy state law, the FDA—a federal agency—had to undertake special effort permitting them to do so. To decide these cases, it is enough to hold that when a party cannot satisfy its state duties without the Federal Government's special permission and assistance, which is dependent on the exercise of judgment by a federal agency, that party cannot independently satisfy those state duties for pre-emption purposes.

Id. at 623-24. Simultaneously, the Court acknowledged that in other cases, "whether a private party can act sufficiently independently under federal law to do what state law requires may sometimes be difficult to determine." *Id*. at 623.

For several reasons, the case against impossibility preemption is much stronger in the general aviation context than it is in the drug label context. First, a general aviation manufacturer's proposed design changes—whether major or minor—are likely to be approved. Even when prior FAA approval is required, the inquiry is simply whether, based on the information provided by the manufacturer, a proposed new design satisfies the relevant airworthiness requirements. A broad range of design choices will do so, and will be approved quickly and as a matter of course. Contrast that with changes to a drug label. As this Court explained in *Fosamax*, "the FDA does not simply approve warnings out of an abundance of caution whenever the manufacturer posits a theoretical association between drug use and an adverse event." 852 F.3d at 274. Instead, the FDA takes care not to exaggerate the risk of approved drugs, or include speculative or hypothetical risks in a label. *Id*. In *Fosamax* itself, the defendant underwent a prolonged back-and-forth with the FAA about proposed changes to its label.

Second, unlike generic drug manufacturers contemplating an arcane and speculative "Mouse Trap game" to change their labels, manufacturers like Lycoming change their designs all the time, using procedures accepted by the FAA. The frequent amendments to the type certificate for the O-320 engine provide one illustration. The way that Lycoming used an Engineering Change Order to change the design of the MA-4SPA carburetor to use lock tab washers provides another.

And the example of a manufacturer that reviewed 2000 minor changes in a year is yet another.

Third, there is no analogue to DERs in the drug context. These individuals exercise the delegated authority of the FAA and have the power to approve certain changes to type designs. But DERs are employed and paid exclusively by manufacturers, and their role as designees is to approve data and changes within the scope of their authority as long as those changes do not violate federal law. Thus, when a change falls within a DER's authority, the agency itself does not have to "undertake special effort," provide "special permission and assistance," or even exercise "judgment" before the change takes effect. *PLIVA*, 564 U.S. at 623-24. Indeed, the entire point of the DER program is to allow private individuals to handle "routine certification tasks" without taxing the agency's "limited resources." FAA, About the FAA Designee Program, https://www.faa.gov/other_visit/aviation_industry/designees_delegations/about/ (June 5, 2017).

Fourth, federal airworthiness standards and state tort standards seldom conflict. State tort law seeks to compensate accident victims and produce safer products. Federal aviation law likewise prioritizes safety as its highest goal. 49 U.S.C. § 40101(a), (d). Thus, designs that violate state law will often also violate federal law. For example, the carburetor in this case does not comply with 14 C.F.R. § 33.35(a), because it was not "designed and constructed to supply an appropriate

mixture of fuel to the cylinders throughout the complete operating range of the engine under all flight and atmospheric conditions." The converse is that design changes required by state law will almost always be permitted under federal law too. This is different from drugs because changes that might make a drug safer, and therefore compliant with state law, will frequently make it less effective—and therefore less capable of serving its purpose under federal law.

Based on these authorities and considerations, we propose the following rule for this case: When a defendant can implement a change or alteration to a design, product, or article without first seeking approval from an employee of the FAA, a state-law claim requiring that change is not preempted unless the defendant proves with clear evidence that the FAA would reject the change or alteration.

This rule tracks controlling precedent about impossibility preemption while accounting for important differences between the general aviation and drug labeling contexts. Indeed, it is the same rule applied in *Wyeth* and in *PLIVA*, accounting for the fact that DERs can approve changes to aviation designs.

That accounting is necessary because any rule that requires a court to pretend that a DER is not an employee of the manufacturer should be rejected. The district court adopted such a rule, emphasizing that DER approval is a form of FAA approval, that DERs apply the same standards as FAA employees, and that DERs act independently of their companies, subject to oversight by the FAA. JA65-67,

JA117. None of those arguments matter for the purposes of preemption analysis, which asks whether it is physically possible for a defendant to comply with both state and federal law without government action. While the DER represents the government, he is emphatically not the government, and that defeats impossibility.

If the Court adopts our rule, we win. Lycoming has not even attempted to argue that the proposed changes to its design would have required the prior involvement of an FAA employee—or that the FAA would have rejected a change to safety wire, a design it had previously approved (indeed mandated) on this specific carburetor.[8]

2. Even Under a More Stringent Legal Rule, Lycoming Cannot Prove Impossibility in This Case.

Even if the Court holds that impossibility preemption arises whenever a manufacturer needs any form of prior FAA approval (including DER approval), it should still reverse for two reasons.

---

[8] We are not attempting to articulate a rule for all aviation cases, but we urge the Court not to hold that any time a defendant must first seek approval before implementing a change or alteration, the plaintiff's state-law claim is always preempted. Such a rule would be devastating to the victims of large-scale air crashes because many changes to commercial aircraft will require prior FAA approval. Moreover, such a rule would not account for the fact that even major changes and alterations are frequently approved quickly and as a matter of course, and it would not account for the FAA's level of reliance on the industry for data approval and testing even when formal FAA approval is required. We believe that even when prior FAA approval is required, a court should not find "impossibility" unless the FAA would likely reject the proposed change. But articulating a comprehensive rule is necessarily fraught, and unnecessary in this case.

First, as explained *supra* 7, 10-11, minor changes do not require any prior FAA approval—and do not even require DER input unless the manufacturer determines that additional data must be approved. *See* FAA Order 8110.37F, at 4-4. The responsibility to classify changes as minor or major likewise rests in the first instance with the type certificate holder. The FAA has the power to reject that classification decision, or reject the change itself, but the change can be implemented before the FAA exercises that power.

The district court obfuscated this point by holding that even minor changes are "subject to approval by the FAA." JA54. But "subject to approval" is not the same as "requiring *prior* approval"—and minor changes do not require prior approval. In fact, "subject to approval" is no different than the facts of *Wyeth*, where the FDA retained the power to review and reject any label change. The legal framework governing minor changes thus ought to be the same as in *Wyeth* and *Fosamax*: the manufacturer should have to show that the FAA would either reject its effort to treat the change as "minor," or would reject the change itself.

Lycoming has not introduced any evidence—let alone clear evidence—that the FAA would reject an effort to alter the carburetor design using the minor change procedure. Really, it cannot do so in light of the fact that the alternative we propose (safety wire) was previously approved by the FAA on this specific carburetor. Indeed, it is hard to imagine a stronger argument that a change would be treated as

minor and accepted. Lycoming has never contested this factual point; it has *only* argued that it is legally irrelevant because minor changes are subject to FAA approval. JA1492-93, JA1517, JA1528-29 (oral argument).

Second, putting aside the minor change procedure, alternative designs have already been approved. Lycoming's O-320 engine is approved on two different type certificates. The first, No. E-274, includes two variants that use carburetors other than the MA-4SPA, and therefore do not have the design defect at issue here. JA560. The second certificate includes fuel-injected variants—which likewise do not exhibit this design defect. Type Certificate Data Sheet No. 1E12, at 1 (rev. 9, 2003), http://www.airweb.faa.gov/Regulatory_and_Guidance_Library/rgMakeModel.nsf/0/a42ead2703d8d81c86256e4e00696255/$FILE/1E12.pdf. Lycoming can therefore already sell O-320 engines that comply with state law.

Lycoming may respond that a version of this argument was rejected in *Bartlett*. There, the plaintiff argued that the defendant could comply with state and federal law by not selling its FDA-approved drug in New Hampshire. The Supreme Court refused to accept this argument, which would have rendered conflict preemption a nullity. *See* 133 S. Ct. at 2477-78. But there is a key distinction between the drug in *Bartlett* and the O-320 engine: there was only one approved version of the drug, and only one way to make it, *id*. at 2475; there are 92 versions of the O-320 engine, and 34 of them, including 2 carbureted versions, do not exhibit the design defect in this

case. If a drug had 34 lawful label options, it is unlikely that the Supreme Court would deem it "impossible" to avoid selling other versions.

3. If Lycoming Had Changed Its Engine Design, Kelly Could Have Implemented the New Design.

Lycoming argued below that Kelly was bound by the terms of its PMA approvals to use the screws, lock tab washers, and gaskets alleged to be defective. That is incorrect because any constraints on Kelly's PMAs do not vitiate its powers as a repair station. In its capacity as a repair station, Kelly was permitted to alter the carburetor in the accident aircraft, and it was not required to use only parts that it manufactured. Consequently, if Lycoming changed its type design, Kelly could have implemented the new design in the accident carburetor as an alteration.

Kelly could have done so with no FAA involvement if the alteration was minor—which it would have been if the different design was set forth in the product's specifications, or if Kelly determined that the alteration would otherwise qualify as minor. Even if the alteration was deemed major, Kelly could have implemented it without FAA involvement if the data was already approved—which it was because a prior airworthiness directive mandated the use of safety wire and a Lycoming DER had likewise signed off on that design. JA1623-25. If that data did not suffice, Lycoming's hypothetical design change would have provided the necessary approved data to support a major alteration by Kelly.

In sum, because Lycoming has not shown that every reasonable juror would conclude that it was impossible for Lycoming to alter its design, its conflict preemption defense fails.

C. In the Alternative, This Court Should Hold That Type Certificates Have No Preemptive Effect.

This Court correctly recognized that no court has previously given preemptive effect to a type certificate. It further recognized that Congress has never indicated that type certificates preempt state law.

Nevertheless, the Court opened the door to a conflict preemption defense that Lycoming never pressed—on the basis of an argument that the FAA made, for the first time in history, in a short post-argument brief. This Court should revisit that aspect of its decision. It is plain that the Court did not intend broadly to foreclose liability for design defect claims. But as the decision below illustrates, that possibility is on the table. Far better to close this can of worms now, and allow Congress to legislate to the extent it wishes to preempt state law claims.

That is especially true because this area of the law is complex and shifting. The FAA revises its regulations and guidance regularly, which will make establishing coherent and enduring legal rules difficult. The universe of type certificated products is large and diverse, which means the risk that a judicial rule produces unintended and unpredictable consequences is high. Different manufacturers also are differently situated in terms of how much unilateral action they can take, which means that

members of the public will have no idea, at the time they are injured, whether they have a viable claim or not—because the answer may depend on idiosyncratic, secret features of a manufacturer's relationship with the FAA. That uncertainty is bad for the public and the industry both. A preemption rule also encourages inefficiency and gamesmanship because manufacturers have a new incentive to alter their approval processes to require FAA input so that they can claim impossibility preemption—a perverse incentive that will increase the government's burden.

We think that because the Court left so many aspects of the inquiry open in its previous decision, it would be justified now in closing the door to type-certification-based impossibility preemption. If the Court disagrees, we preserve this argument for further review.

II. Lycoming Is Not Entitled To Summary Judgment On State Law Grounds.

Sikkelee asserts strict liability, negligence, and failure to report known defects to the FAA. The district court erroneously held that these claims fail as a matter of law.

A. Lycoming Is Strictly Liable for Defects in Its Engine.

As the manufacturer of the engine in the accident aircraft, Lycoming is strictly liable for defects in its engine design. In the 2012 summary judgment opinion, the district court erroneously reached the contrary conclusion, holding that Lycoming's engine was not defective when it left Lycoming's possession in 1969. JA13. It is

undisputed, however, that when the engine left Lycoming's possession, it incorporated the same design features that allegedly caused David Sikkelee's plane to crash: the screws mating the throttle body to the float bowl were secured with lock tab washers that could loosen due to engine vibration, and the gasket material was susceptible to gasket set. Under controlling law today, Lycoming cannot win on summary judgment that this was not a defect.[9]

1. The Legal Standard in Pennsylvania

The standard for strict liability in Pennsylvania derives from Section 402A of the Second Restatement of Torts, which provides that:

> (1) One who sells any product in a defective condition unreasonably dangerous to the user or consumer or to his property is subject to liability for physical harm thereby caused to the ultimate user or consumer, or to his property, if

---

[9] The district court suggested that Sikkelee's counsel conceded that the engine was not defective in 1969. At a November 2013 evidentiary hearing, more than a year after summary judgment had already been granted, counsel stated that he could not prove the engine was defective in 1969, reasoning that its subsequent use on a Cessna 172 aircraft was not then known. JA896-98. This Court should not rely on that statement for two reasons. First, it was not a concession that the 2012 summary judgment ruling was correct. Instead, it was part of a broader discussion about appropriate jury charges for an imminent trial. Second, the statement was made before two key developments: (1) this Court decided that state standards of care govern the inquiry; and (2) the Pennsylvania Supreme Court decided *Tincher v. Omega Flex, Inc.*, 104 A.3d 328 (Pa. 2014), articulating two tests for deeming a product defective and clarifying that this constitutes an issue of fact. *See infra* 42-43. After these developments, we asked the district court to revisit the 2012 summary judgment decision, explaining that it was clearly wrong in light of now-controlling law. JA1542-43; Dkt. 537, at 18-19.

(a) the seller is engaged in the business of selling such a product, and

(b) it is expected to and does reach the user or consumer without substantial change in the condition in which it is sold.

(2) The rule stated in Subsection (1) applies although

(a) the seller has exercised all possible care in the preparation and sale of his product, and

(b) the user or consumer has not bought the product from or entered into any contractual relation with the seller.

Interpreting these elements, courts have held that to prevail on a strict liability claim based on a defective design, a plaintiff must show: (1) the product was defective; (2) the defect proximately caused the plaintiff's injury; and (3) the defect existed at the time the product left the defendant's possession or control. *Pavlik v. Lane Ltd./Tobacco Exp. Int'l*, 135 F.3d 876, 881 (3d Cir. 1998); *Wright v. Ryobi Techs., Inc*., 175 F. Supp. 3d 439, 449 (E.D. Pa. 2016).

While Sikkelee's prior appeal was pending, the Pennsylvania Supreme Court decided *Tincher v. Omega Flex, Inc.*, 104 A.3d 328 (Pa. 2014). *Tincher*'s first key holding is that a "plaintiff may prove defective condition by showing either that (1) the danger is unknowable and unacceptable to the average or ordinary consumer, or that (2) a reasonable person would conclude that the probability and seriousness of harm caused by the product outweigh the burden or costs of taking precautions." *Id*. at 335. The former test is known as the "consumer expectations test"; the latter is the "risk-utility test."

Tincher's second key holding is that under either test, "[w]hether a product is in a defective condition is a question of fact ordinarily submitted for determination to the finder of fact; the question is removed from the jury's consideration only where it is clear that reasonable minds could not differ on the issue." *Id*.

2. Lycoming's Engine Is Defective Under Both the Consumer Expectation Test and the Risk-Utility Test.

A reasonable jury could find that Lycoming's engine design was "defective" under the consumer expectations test. An ordinary consumer would neither know that Lycoming's method for keeping the aircraft engine together was incapable of withstanding engine normal vibration, nor accept that risk. Courts adjudicating similar cases—in Pennsylvania and elsewhere—have basically held as much. *See Lewis v. Lycoming*, 2015 WL 3444220, at *4 (E.D. Pa. May 29, 2015) (denying Lycoming's motion for summary judgment when helicopter engine failed mid-flight due to defective fuel metering system); *Wagner v. Flightcraft, Inc.*, 643 P.2d 906, 911 (Wash. Ct. App. 1982) (applying consumer expectations test to uphold jury verdict arising out of failure of the same model carburetor at issue in this case, when carburetor had been overhauled and allegedly modified by overhauler); *see also High v. Pennsy Supply, Inc.*, 154 A.3d 341, 350 (Pa. 2017) (denying summary judgment when manufacturer of concrete argued that risks should have been obvious to plaintiff); *Berkebile v. Brantly Helicopter Corp.*, 281 A.2d 707, 710 (Pa. 1971)

(holding that question of design defect in helicopter engine should have gone to the jury).

Under the risk-utility test, the result is the same. "The risk-utility test offers courts an opportunity to analyze *post hoc* whether a manufacturer's conduct in manufacturing or designing a product was reasonable." *Tincher*, 104 A.3d at 389. Some relevant factors include the utility of the product; the likelihood of injury and its probable seriousness; the availability of safe substitutes; the manufacturer's ability to eliminate the defect without impairing the product's usefulness or making it too expensive; the user's ability to avoid danger through due care; and the user's anticipated awareness of the dangers inherent in the product. *Id*. at 389-90.

Most courts applying the risk-utility approach hold that "[t]he quality of the product may be measured not only by the information available to the manufacturer at the time of design, but also by the information available to the trier of fact at the time of trial." *Dart v. Wiebe Mfg., Inc.*, 709 P.2d 876, 881 (Ariz. 1985); *Barker v. Lull Eng'g Co.*, 573 P.2d 443, 454 (Cal. 1978) (cited favorably in *Tincher*, and holding that the risk-utility test incorporates "hindsight"); *Blue v. Envtl. Eng'g, Inc.*, 828 N.E.2d 1128, 1140-41 (Ill. 2005) (same); *Smith v. Ingersoll-Rand Co.*, 214 F.3d 1235, 1248 (10th Cir. 2000) (analyzing New Mexico law); *Coffey v. Dowley Mfg., Inc.*, 187 F. Supp. 2d 958, 968 (M.D. Tenn. 2002) (analyzing Tennessee law), *aff'd*, 89 F. App'x 927 (6th Cir. 2003); *In re Haw. Fed. Asbestos Cases*, 665 F. Supp. 1454,

1457 (D. Haw. 1986) ("[T]he product's design is considered at the time of trial not at the time of manufacture."); *Wood v. Ford Motor Co.*, 691 P.2d 495, 498 (Or. Ct. App. 1984) ("The test is whether a reasonably prudent manufacturer would have so designed and sold the product in question had it known of the risk which injured plaintiff.").[10]

Here, the evidence would allow a reasonable jury to weigh these factors and conclude that Lycoming's engine was defective. Carburetors are useful—although alternatives like fuel injection make them less useful than they once were. But the other risk-utility factors all weigh in favor of liability. As Sikkelee's experts explained, the likelihood that Lycoming's engine would cause fatal injury was high; end users like David Sikkelee were not in a position to anticipate or account for that danger; and an alternative design was both available and cheap because the screws holding the carburetor together could have been secured with safety wire. JA534-43 (Sommer Report); JA462 (McSwain Report); JA 497-98 (Twa Report). A jury could

[10] The Pennsylvania Supreme Court reserved this question in *Tincher*, but the cases it cited (referenced above) suggest that it would extend liability to this circumstance. *See* 104 A.3d at 404-05 (declining to "speak definitively to this issue," but acknowledging that "the strict liability cause of action theoretically permits compensation where . . . harm results from risks unknowable at the time of manufacture or sale"). That result is also the most consistent with Section 402A, which provides that liability will attach even if the manufacturer has exercised "all possible care."

also find it important that in 1969, Lycoming had no warnings in place about this latent defect. When it implemented a warning, SB366 in 1973, that warning was entirely inadequate, and risked aggravating the problem.

3. The Defect Proximately Caused Sikkelee's Injuries.

There is ample evidence in the summary judgment record that the design defect was a proximate cause of the crash that killed David Sikkelee. Sikkelee's experts so urged, and the physical evidence—showing the halves of the carburetor separated after the crash, polishing on the screws indicating loosening, and fuel staining indicating pre-crash leakage—supports their conclusions. JA534-36, JA541-43 (Sommer Report); JA450-59, JA472-73 (McSwain Report).

The district court cited other factors, including the passage of time, the composition of the overhauled carburetor, possible missed maintenance, and possible pilot error as potential alternate causes of the crash. These contentions are drawn from defendants' expert reports, and their materiality is disputed by our experts. These genuine factual disputes preclude summary judgment on the issue of causation.

4. The Engine's Condition Did Not Substantially Change Prior to the Crash, and Any Changes That Did Occur Were Foreseeable.

"Pursuant to Pennsylvania law, courts have held that a manufacturer or seller is not liable for injuries caused by a defective product if the defect was created by a substantial alteration in the product amounting to a supervening or intervening cause

of the plaintiff's injuries." *Davis v. Berwind Corp.*, 640 A.2d 1289, 1297 (Pa. Super. Ct. 1994), *aff'd*, 690 A.2d 186 (Pa. 1997). To qualify as a "superseding" or "intervening" cause, an event must be "highly extraordinary." *Corbett v. Weisband*, 551 A.2d 1059, 1073 (Pa. Super. Ct. 1988).

Synthesizing these precedents, the Pennsylvania Suggested Standard Civil Jury Instructions explain that a defendant must prove that after the product left the defendant's possession, it was altered in a manner that "was so extraordinary that it was not reasonably foreseeable to" the defendant, "and therefore was the only factual cause of" the plaintiff's "harm." Pa. Suggested Standard Civil Jury Instructions § 16.120. "[T]his limitation has effect only where the change alters the very nature of the product and its defect," and that the jury should not even be charged on it "unless there is competent evidence that the defect alleged by the plaintiff did, in fact, arise after the product left the hands of the manufacturer. For example, if the alleged defect is one of design or improper warnings, the charge need not be given." *Id*. subcomm. note.

Under this standard, Lycoming cannot prevail against Sikkelee's claims. Indeed, in Pennsylvania, this issue should not even go to a jury in a design defect case.

The district court held to the contrary that the overhaul constituted an unforeseeable substantial change to the carburetor. That is clearly wrong, because replacing a carburetor on an engine with a functionally identical substitute does not

"alter the very nature of the [engine] or its defect."[11] Even to the extent it does, that course of events is entirely foreseeable because an engine, including the carburetor, is supposed to be overhauled periodically. It is also foreseeable that PMA parts will be used in an overhaul; that's why PMA parts exist.

Everything else that transpired after the engine's sale (*e.g.*, time in storage, installation on a Cessna 172 aircraft, alleged missed maintenance) was similarly not a substantial change that created the design defect, and was sufficiently foreseeable that it does not absolve Lycoming of harm. At a minimum, a reasonable jury could have reached those conclusions, and so summary judgment must be denied.

---

[11] The district court cited a prediction in *Schwartz v. Abex Corp.*, 106 F. Supp. 3d 626, 653 (E.D. Pa. 2015), that Pennsylvania courts would hold that any time a component part is replaced, a "substantial change" occurs. JA141-42. That determination is unpersuasive here. First, the court was wrong to adjudicate this as a question of law, and not fact, in light of *Tincher*. Second, as the Pennsylvania jury instructions make clear, in a design defect case, the defect is inherent to the design, and not to the particular parts used to implement that design. Third, *Schwartz*'s reasoning turned on a prediction that Pennsylvania courts would decide that an aftermarket part can never be part of a manufacturer's "product" for strict liability purposes. That made sense in *Schwartz*, because the manufacturer's product contained no asbestos, and the aftermarket product did—so the aftermarket product was qualitatively different. But it makes no sense here, where the overhauled carburetor is functionally the same as the original one, and the source of the alleged defect is not Kelly's action, but Lycoming's design. Moreover, in federal aviation law, the carburetor is not a separate "product" from Lycoming's engine. The regulations define the word "product" to include an entire engine. 14 C.F.R. § 21.1(b)(6). A carburetor is an "article," *i.e.*, a part of a product. *Id.* § 21.1(b)(2). Moreover, carburetor designs are only approved as parts of engines. *See* JA579.

B. Independently, Lycoming Is Liable for Defects in the Overhauled Carburetor.

Because the district court in 2012 granted summary judgment to Lycoming with respect to the condition of the engine in 1969, subsequent litigation has focused on whether Lycoming is liable for defects in the overhauled carburetor. It is.

In Pennsylvania, designers and manufacturers can be liable for defects in aftermarket parts installed on their products. That is what happened to Lycoming itself in *Pridgen v. Parker Hannifin Corp.* That case, like this one, involved defects in an overhauled Marvel-Schebler carburetor that had not been physically manufactured by Lycoming. *See Pridgen v. Parker Hannifin Corp.*, 905 A.2d 422, 436 n.16 (Pa. 2006), *adhered to on reargument*, 916 A.2d 619 (Pa. 2007). The court "agree[d] with [plaintiffs'] observation that [type certificate holders like Lycoming] sit at the top of the aviation food chain with respect to all components comprising the type certificated engine," so that they "might indeed be liable for design defects in replacement parts and/or the aircraft systems within which such components function." 916 A.2d at 623 (quotation marks omitted). Ultimately, a jury found against Lycoming.

The principles announced in *Pridgen* govern here. Lycoming sits at the top of the food chain with respect to the carburetors used on its engine. It chose to use MA-4SPA carburetors. It chose to require lock tab washers and hex screws to attach the throttle body to the bowl. And Lycoming's service and maintenance instructions,

which it is required by federal law to develop, and which it describes as "mandatory," JA604, order third parties working on or overhauling its engines to follow this design. JA517 (Sommer Report); JA1420-21 (oral argument); JA1304-05 (SOF). In turn, Kelly sought PMA approval to make parts for the carburetor by showing that its parts have the same form, fit, and function as OEM parts. JA1137. It used a Lycoming parts list to show how its parts will fit into a carburetor on a Lycoming engine. JA1688-89. And it installed parts that are functionally identical to OEM parts. JA624 (SOF); JA571, JA575 (Kelly records detailing instructions followed).

Lycoming argued for a different result based on *Tincher*. Specifically, Lycoming argued that under Section 402A of the Second Restatement of Torts, it cannot be held liable unless it physically manufactured, sold, or supplied the replacement carburetor. This crabbed reading of the Restatement is inconsistent with *Tincher* itself, which cautioned that a Restatement is not like a statute, to be parsed and applied in a wooden fashion. 104 A.3d at 354. Instead, "a court should consider whether the application is logical and serves the interests of justice, and whether the general principle has been accepted elsewhere." *Id*. at 355.

There is no one-size-fits-all answer, and courts are divided over whether Section 402A imposes liability on a manufacturer and seller of a product when aftermarket parts cause the harm. *Compare, e.g.*, *Union Supply Co. v. Pust*, 583 P.2d 276, 281

(Colo. 1978) (finding that Section 402A applies to designers); *Denekamp v. Hetronic USA, Inc.*, 2008 WL 4646954, at *3 (D.S.D. Oct. 17, 2008) (same); *Taylor v. Gen. Motors, Inc.*, 537 F. Supp. 949, 952-53 (E.D. Ky. 1982) (same); *Alm v. Aluminum Co. of Am.*, 717 S.W.2d 588, 591 (Tex. 1986) (same), *with Exxon Shipping Co. v. Pac. Res., Inc.*, 789 F. Supp. 1521, 1528 (D. Haw. 1991) (no liability for entity that was not in chain of title), *and Baughman v. Gen. Motors Corp.*, 627 F. Supp. 871, 878 (D.S.C. 1985) (no liability when the defendant did not "exercise[] dominion over the allegedly defective" part), *aff'd*, 780 F.2d 1131 (4th Cir. 1986).

Courts considering Pennsylvania law have discussed this issue in failure-to-warn cases about products designed to contain asbestos—and they too have reached divergent conclusions. Some have concluded that when a manufacturer creates a product that is designed to incorporate asbestos, but does not itself manufacture or install the asbestos, the manufacturer can be held strictly liable for asbestos-related warnings. *See Chicano v. Gen. Elec. Co.*, 2004 WL 2250990, at *3 (E.D. Pa. Oct. 5, 2004) (denying defendant's motion for summary judgment and noting that its turbine engine could not function properly without thermal insulation). Others have reached the opposite conclusion. *See Schwartz v. Abex Corp.*, 106 F. Supp. 3d 626, 653 (E.D. Pa. 2015) (finding no strict liability for failure to warn of asbestos danger, but acknowledging negligence liability).

Here, the legal and policy concerns animating strict liability support Sikkelee. As in *Chicano*, the installation of an overhauled carburetor was entirely foreseeable to Lycoming: Lycoming recommends that engines and carburetors be periodically overhauled together, and the engine cannot function without a carburetor. JA547 (Dep. Lycoming Employee Moffett); JA443 (Dep. Lycoming Employee Folk). Moreover, the design of the overhauled carburetor was exactly the same as Lycoming's design. JA941. That was not a coincidence, but instead the natural consequence of a repair station following Lycoming's instructions to overhaul a carburetor for use on a Lycoming engine. Thus, Lycoming played an indispensable role in introducing the overhauled carburetor into the stream of commerce.

Holding Lycoming accountable for defects in the carburetor design would thus serve the purposes of strict liability, which are to allocate risk and incentivize safer designs. Type certificate holders are uniquely well-positioned to make PMA products safer because if they change their designs, they exert pressure on every PMA holder to adopt a safer design too. Type certificate holders also wield influence over repair stations and mechanics servicing their products, as those entities are required to follow the type certificate holder's manuals and instructions. Holding Lycoming liable thus places the risk with the party best able to control it and insure against it.

For similar reasons, this Court should reverse the district court's judgment regarding negligence. The principal difference between strict liability and negligence is the latter requires a showing of fault. Here, that is easy. A safer design had been used; Lycoming changed the design to an unsafe one to save some money; it ignored years of evidence showing that the design was defective and unreasonably dangerous; and it issued service and maintenance instructions that aggravated the problem. Lycoming knew or should have known that PMA holders would mimic its design, and it had a duty to take action to prevent that unsafe design from harming consumers by making a change. *Cf. Schwartz*, 106 F. Supp. 3d at 656. A jury easily could have found that Lycoming's failure to do so—despite knowing about this problem for decades—was unreasonable, and a proximate cause of the subsequent crash.

C. Lycoming Is Liable for Failure to Notify the FAA of Known Defects.

Finally, this Court should reverse the district court's holding that Lycoming cannot be held liable for its failure to report known design defects to the FAA. Federal regulations require a type certificate holder to "report any failure, malfunction, or defect in any product or article manufactured by it" that either has resulted in engine failure or could result in engine failure. 14 C.F.R. § 21.3. It is undisputed that Lycoming did not report its design as defective to the FAA.

The district court reasoned that because the carburetor was not manufactured by Lycoming, it had no obligation to notify the FAA about defects in the carburetor. It further held that because the defect may have been caused by improper maintenance, that also defeated Lycoming's obligation.

That's wrong. The gravamen of the failure-to-report claim is not that Lycoming failed to notify the FAA about this crash. It is that Lycoming refused for decades before the crash to come clean to the FAA about a defect in its engine design—and thus prevented the FAA from taking appropriate corrective action that could have prevented the crash. The accident carburetor is therefore irrelevant.

The district court also held that Sikkelee had not established causation. But the FAA was concerned about the problem of body-to-bowl screws loosening, and was looking to Lycoming for advice about a solution to the problem. The FAA had also previously mandated the use of safety wire. Had Lycoming explained that its design is defective because it allows the carburetor to come apart due to engine vibration, it is likely that the FAA would have ordered corrective action (*e.g.*, a reversion to the previously mandated design). Instead, Lycoming issued a faulty service bulletin, masking the problem. Lycoming also has not offered any evidence rebutting causation, and so on the record before the Court, a reasonable jury could find that the FAA would have acted if Lycoming had disclosed that its design creates a risk of engine failure.

CONCLUSION

The judgment below should be reversed.

Respectfully submitted,

Dated: January 26, 2018

/s/ Tejinder Singh

Tejinder Singh
GOLDSTEIN & RUSSELL, P.C.
7475 Wisconsin Avenue
Suite 850
Bethesda, MD 20814
(202) 362-0636

David I. Katzman
KATZMAN LAMPERT
100 West Big Beaver Road
Suite 130
Troy, MI 48084
(248) 258-4800

Counsel for Appellant Jill Sikkelee

CERTIFICATES OF COMPLIANCE

Pursuant to Fed. R. App. P. 32(a)(7)(B), I hereby certify that this brief was produced in Microsoft Word 2016 Times New Roman 14-point type and contains 12,986 words, excluding the parts of the brief exempted by Fed. R. App. P. 32(f).

I further certify pursuant to L.A.R. 31.1(c) that the electronic copy of this brief filed with the Court is identical in all respects to the hard copy filed with the Court, and that a virus check was performed on the electronic version using Windows Defender. No computer virus was found.

Dated: January 26, 2018

/s/ Tejinder Singh
Tejinder Singh

CERTIFICATION OF BAR MEMBERSHIP

I hereby certify that I am a member of the Bar of the United States Court of Appeals for the Third Circuit and remain a member in good standing of the Bar of this Court.

Dated: January 26, 2018

/s/ Tejinder Singh
Tejinder Singh

APPENDIX VOLUME 1

TABLE OF CONTENTS

Page

VOLUME 1

VOLUME 2

Page

VOLUME 2 (CONTINUED)

---

* Indicates these documents are reproduced here in excerpted form by designation of the parties.

† Reproduced as filed at Dkt. 182-14 (Nov. 1, 2010), which is significantly more legible than the version filed at Dkt. 234-8.

‡ The exhibit at Dkt. 234-9 is identical to the exhibit at Dkt. 473-1, both reproduced here.

Page

VOLUME 2 (CONTINUED)

VOLUME 3

Page

VOLUME 3 (CONTINUED)

Page

VOLUME 3 (CONTINUED)

Page

VOLUME 4 (FILED UNDER SEAL)

IN THE UNITED STATES DISTRICT COURT
FOR THE MIDDLE DISTRICT OF PENNSYLVANIA

JILL SIKKELEE, individually and as, Personal Representative of the estate of DAVID SIKKELEE, deceased;	:	4:07-cv-00886
Plaintiff,	:	
v.	:	Hon. John E. Jones III
PRECISION AIRMOTIVE, CORPORATION, *et al.*,	:	
Defendants.	:	

MEMORANDUM & ORDER

July 3, 2012

Presently pending before the Court in this wrongful death and survival action is the Motion for Partial Summary Judgment (Doc. 220) and the Motion for Summary Judgment (Doc. 252) of Defendant AVCO Corporation on behalf of its Lycoming Engines Division (collectively "Lycoming"). The Motions have been fully briefed (Docs. 223, 235, 249, 257, 269, 276, 292, 296) and are therefore ripe for our review. For all of the reasons fully articulated herein, we will grant in part and deny in part Lycoming's Motions.

I. PROCEDURAL HISTORY

The parties and the Court are intimately familiar with the lengthy and complex procedural and factual predicate of this litigation and we thus recite only

the most pertinent procedural points here. Plaintiff initiated this action on May 16, 2007 with the filing of a Complaint that asserted claims for strict liability, negligence, breach of warranty, concert of action, and misrepresentation against seventeen different Defendants[1] arising out of an aircraft accident that resulted in the death of her husband, David Sikkelee ("the decedent"). (Doc. 1). The Defendants filed individual answers to the Plaintiff's Complaint between July 25 and August 1, 2007. (Docs. 52-57).

Several Defendants filed, or eventually joined in, a Motion for Judgment on the Pleadings on March 17, 2009. (Doc. 107). We granted in part and denied in part said motion after finding that the field of aviation safety is preempted by federal law and regulation. We thus dismissed Plaintiff's claims which were based on alleged violations of state law standards of care but permitted the Plaintiff to seek state law remedies for alleged violations of federal standards of care. (Doc. 158). The Court directed the Plaintiff to file an Amended Complaint within twenty

[1] The Complaint places the seventeen Defendants into three different groups: the Precision Defendants, the Kelly Defendants, and the Lycoming Defendants. The Precision Defendants include: Precision Airmotive, LLC; Precision Airmotive Corporation; Precision Aerospace Corporation; Precision Aerospace Services f/k/a Precision Aerospace Group, LLC; Precision Aviation Products Corporation and Precision Products, LLC; Former Fuel Systems, Inc. f/k/a Facet Fuel Systems, Inc.; and Mark IV Industries, Inc. The Kelly Defendants include: Kelly Aerospace, Inc., Kelly Aerospace Power Systems, Inc., Consolidated Fuel Systems, Inc., and Electrosystems, Inc., which merged with Consolidated Fuel Systems, Inc. The Lycoming Defendants include: Textron, Inc.; AVCO Corporation; and Textron Lycoming Reciprocating Engine Division, a division of AVCO Corporation.

(20) days. (*Id.*).

On August 31, 2010, within the prescribed twenty (20) day period, Plaintiff filed her First Amended Complaint. On September 17, 2010, Defendants AVCO and Lycoming Engines filed a Motion to Dismiss and/or Strike, (Doc. 165), Defendant Textron filed a Motion to Dismiss, (Doc. 166), and Defendants Precision Airmotive Corporation and Precision Airmotive LLC filed a Motion to Dismiss and/or Strike. (Doc. 167). On October 15, 2010, the Kelly Defendants filed their Motion to Dismiss. (Doc. 175).

On April 8, 2011, the Court entered a Memorandum and Order granting in part and denying in part the above motions.[2] The Court denied Lycoming's Motion to the extent it related to Counts IV (strict liability) and VI (negligence), but granted it to the extent it related to Counts V (breach of warranties), X (misrepresentation) and XI (concert of action). We further ordered Plaintiff to file a second amended complaint within ten (10) days in accordance with our decision. (Doc. 204). Plaintiff filed the Second Amended Complaint within the prescribed

[2] Throughout the pendency of the litigation and the above-noted motion practice, all Defendants, with the exception of Defendant AVCO, on behalf of Defendant Lycoming Engines, have been terminated from the action. On July 13, 2010, the Court approved a settlement between Plaintiff and the Kelly Defendants. (Doc. 146). Defendant Textron was terminated from the action on November 2, 2010, pursuant to a Stipulation of Dismissal. (Doc. 184). Defendants Precision Aerospace Corporation, Precision Aerospace Services, LLC, Precision Aviation Products Corporation, Precision Products LLC, Zenith Fuel Systems LLC, Former Fuel Systems, Inc., and Mark IV Industries, Inc., were terminated on April 20, 2011.

ten (10) day period, (Doc. 205), and the Defendants answered on May 5, 2011. (Docs. 206-208).

On July 22, 2011, Lycoming filed a Motion for Determination of Applicable Law, (Doc. 219), seeking application of North Carolina law to all matters concerning liability in this litigation. On August 5, 2011, Lycoming filed the instant Motion for Partial Summary Judgment, seeking summary judgment on Count IV and Count VI to the extent that those causes of action relate to alleged defects in certain carburetor replacement components. (Doc. 220). On October 3, 2011, Lycoming filed a Motion for Summary Judgment on the remainder of the claims in Count IV and Count VI relating to alleged defects in the subject aircraft engine. (Doc. 252).

On October 14, 2011, Plaintiff filed a Motion to Supplement the Record with several recently-discovered AVCO admissions. (Doc. 256). By Order dated December 21, 2011, the Court granted the Motion to Supplement. (Doc. 279). Consistent with the Order's mandate, on January 10, 2012, the Plaintiff filed a supplemental statement of facts (Doc. 280), and on February 3, 2012, Lycoming filed a responsive statement of facts. (Doc. 284).

On March 13, 2012, the Court ruled on Lycoming's Motion to Determine Applicable Law and concluded that Pennsylvania law will apply to the liability

portion of this action. (Doc. 288). In the Memorandum and Order denying the Motion, the Court noted that Lycoming had relied considerably on the application of North Carolina law in its Motions for Summary Judgment and thus granted the parties leave to supplement their briefs in light of this determination. (*Id.*). On April 20, 2012, Lycoming filed supplemental briefs in support of its Motions (Docs. 292-93), and Plaintiff filed a brief in opposition on May 21, 2012. (Doc. 296). Both Motions have now been fully and excellently briefed by the parties and are thus ripe for our review.

II. STANDARD OF REVIEW

Summary judgment is appropriate if the record establishes "that there is no genuine issue as to any material fact and that the movant is entitled to judgment as a matter of law." Fed. R. Civ. P. 56(c). Initially, the moving party bears the burden of demonstrating the absence of a genuine issue of material fact. *Celotex Corp. v. Catrett*, 477 U.S. 317, 323 (1986). The movant meets this burden by pointing to an absence of evidence supporting an essential element as to which the non-moving party will bear the burden of proof at trial. *Id.* at 325. Once the moving party meets its burden, the burden then shifts to the non-moving party to show that there is a genuine issue for trial. Fed. R. Civ. P. 56(e)(2). An issue is "genuine" only if there is a sufficient evidentiary basis for a reasonable jury to find

for the non-moving party, and a factual dispute is "material" only if it might affect the outcome of the action under the governing law. *Anderson v. Liberty Lobby, Inc.*, 477 U.S. 242, 248-49 (1986).

In opposing summary judgment, the non-moving party "may not rely merely on allegations of denials in its own pleadings; rather, its response must . . . set out specific facts showing a genuine issue for trial." Fed. R. Civ. P. 56(e)(2). The non-moving party "cannot rely on unsupported allegations, but must go beyond pleadings and provide some evidence that would show that there exists a genuine issue for trial." *Jones v. United Parcel Serv.*, 214 F.3d 402, 407 (3d Cir. 2000). Arguments made in briefs "are not evidence and cannot by themselves create a factual dispute sufficient to defeat a summary judgment motion." *Jersey Cent. Power & Light Co. v. Twp. of Lacey*, 772 F.2d 1103, 1109-10 (3d Cir. 1985). However, the facts and all reasonable inferences drawn therefrom must be viewed in the light most favorable to the non- moving party. *P.N. v. Clementon Bd. of Educ.*, 442 F.3d 848, 852 (3d Cir. 2006).

Summary judgment should not be granted when there is a disagreement about the facts or the proper inferences that a fact finder could draw therefrom. *Peterson v. Lehigh Valley Dist. Council*, 676 F.2d 81, 84 (3d Cir. 1982). Still, "the mere existence of *some* alleged factual dispute between the parties will not defeat

an otherwise properly supported motion for summary judgment; there must be a *genuine* issue of *material* fact to preclude summary judgment." *Anderson*, 477 U.S. at 247-48.

III. STATEMENT OF MATERIAL FACTS

The following facts are derived from the record and viewed in the light most favorable to the Plaintiff in accordance with the standard of review applicable to a motion for summary judgment. Due to the factual complexity of this litigation and the familiarity of the parties and the Court with the record, we briefly state the pertinent facts herein and supplement them as necessary with additional facts throughout our analysis.

This action arises out of an aircraft accident involving a 1976 Cessna 172N airplane on July 10, 2005 at the Transylvania County Airport in Brevard, North Carolina. The accident resulted in the death of David Sikkelee ("the decedent"), husband of Jill Sikkelee ("Plaintiff"), and significant injuries to the decedent's brother, Craig Sikkelee ("the passenger"). Shortly after takeoff on July 10, 2005, the plane crashed to the ground, resulting in the death of the decedent and serious injuries to the passenger. Plaintiff alleges that the accident was caused by a faulty carburetor, specifically a loosening throttle body to bowl assembly within said carburetor, installed in the subject engine.

Lycoming designed and manufactured a certain 0-320-D2C aircraft engine, bearing serial number L-6590-39A ("engine S/N L-6590-39A" or "the subject engine"), in Williamsport, Pennsylvania. (Doc. 253, ¶ 1). Lycoming shipped the subject engine to Beagle Aircraft, Inc., on September 4, 1969. (*Id.* ¶ 2). The Lycoming O-320 engine, S/N L-6590-39A, was installed on the Cessna 172N aircraft when it crashed on July 10, 2005. (*Id.* ¶ 3). Plaintiff admits that the carburetor that was installed on the Cessna 172N was not the same carburetor Lycoming shipped with the subject engine in 1969 but was instead a different carburetor. (Doc. 221, ¶ 5). The carburetor installed in the subject engine on the accident aircraft ("replacement carburetor"), a Precision MA-4SPA carburetor, was manufactured by the Precision Defendants and was completely overhauled by the Kelly Defendants on or about August 3-5, 2004. (*Id.* ¶ 6; Doc. 253, ¶ 5).

Lycoming holds the FAA-issued Type Certificate for the MA-4SPA model carburetors and the MA-4SPA carburetor at issue here was manufactured pursuant to Lycoming design, which cannot be modified or altered without approval from Lycoming (Doc. 234, ¶ 5). Defendant Precision and its predecessors were permitted to manufacture the carburetor pursuant to a licensing agreement with Lycoming. (*Id.*). The MA-4SPA carburetor design is not approved separately and is part of the Lycoming engine type design. (*Id.*).

As the holder of the Type Certificate for the engine, Lycoming approved and implemented the engineering change which effected the throttle body to bowl screw design at issue here in lieu of a safety wire assembly. (*Id.* ¶ 5, 22). This change was made in 1965. (*Id.* ¶ 22). Since 1972, Lycoming has been made aware of various reports of malfunctions and defects related to its O-320 series engines and the MA-4SPA carburetors, specifically concerning loosening throttle body to bowl assemblies. (*Id.* ¶¶ 24-25).

The 2004 overhaul of the subject engine, including the overhaul of the carburetor, was accomplished pursuant to and required by Lycoming's continued airworthiness instructions, which the FAA mandates Lycoming, as the Type Certificate holder for the entire engine design, maintain in compliance with federal aviation regulations. (*Id.* ¶¶ 5-6). The Kelly Defendants further complied with Lycoming's Service Bulletin 366, which was intended to alleviate the known throttle body to bowl assembly defects. (*Id.* ¶ 6). Lycoming's continued airworthiness instructions recommend that the carburetor be replaced at the time of the engine overhaul, and its Type Certificate Data Sheet ("TCDS") instructs mechanics to use MA-4SPA replacement carburetors when overhauling this engine. (*Id.*). Accordingly, as required by Lycoming's design, an MA-4SPA carburetor was installed on the subject engine during the 2004 overhaul.

The replacement carburetor on the subject engine at the time of the crash was a Lycoming-approved Marvel Schebler MA-4SPA model 10-5135 carburetor, which bore Lycoming part number, LW-13659. (*Id.*). Plaintiff's three experts conclude that the carburetor design was and is defective and dangerous. (Docs. 234-4, 234-5, 234-6). Donald E. Sommer, P.E., an expert who investigated the subject engine subsequent to the crash, noted that the carburetor bowl screws had loosened in the subject engine; he conducted several tests and concluded that "[t]he accident O-320 MA-4SPA carburetor is unreasonably dangerous and caused the death of David Sikkelee." (Doc. 234-6, pp. 34). He ultimately concluded that Lycoming "failed to exercise reasonable care in the design, manufacture, and support of the accident aircraft's engine and carburetor" and that Lycoming's O-320-D2C engine "is a defective engine due to the incorporation of the Precision MA-4SPA carburetor." (*Id.*)

IV. DISCUSSION

As stated above, the only remaining causes of action sound in negligence and strict liability. As a threshold matter, Lycoming contends that both of these claims fail because the Plaintiff is unable to establish that Lycoming either manufactured, sold, or distributed a defective product. We first address this critical preliminary issue and, because we find that a reasonable jury could conclude that

Lycoming was a *de facto* manufacturer of a defective product, proceed next to analyzing the remaining elements of the Plaintiff's negligence and strict liability claims.

A. Is There a Genuine Issue as to Whether Lycoming Manufactured, Distributed, or Sold an Allegedly Defective Product?

Under both of the Plaintiff's remaining causes of action, her burden of proof requires that she establish that Lycoming is a manufacturer, distributor, or seller of the allegedly offending product. *See Mellon v. Barre-Nat'l Drug Co.*, 636 A.2d 187, 191 (Pa. Super. Ct. 1993) (in a negligence-based products liability action, the "defendant must be identified as the manufacturer, distributor, or seller of the offending product before the injuries suffered by the plaintiff may be found to be proximately caused by some negligent act or omission of the defendant"); *Kimco Dev. Corp. v. Michael D's Carpet Outlets*, 637 A.2d 603, 606 (Pa. 1983) ("Strict product liability is premised on the concept of enterprise liability for casting a defective product into the stream of commerce."). Thus, as a threshold matter, we must address the parties' arguments with respect to whether or not Lycoming cast a defective product into the market.

Lycoming contends that it is entitled to summary judgment because, while it admittedly sold the subject engine in 1969, the allegedly defective replacement parts installed during the engine's overhaul in 2004 were manufactured and sold by

others, thus failing the preliminary requirement of a Pennsylvania products liability action. Indeed, Lycoming submits that its last physical "contact" with the product was in 1969. Lycoming asserts that the evidence is entirely "one-sided" and establishes that it did not manufacture, sell, distribute, or otherwise "place[] an allegedly defective product into the stream of commerce," thus requiring entry of summary judgment in its favor on both of Plaintiff's remaining claims. (Doc. 249, pp. 10-11). Indeed, Lycoming submits that the facts are *undisputed* that it did not manufacture, distribute, sell, or otherwise cast into the stream of commerce the allegedly defective replacement carburetor and its component parts.

In support of this argument, Lycoming points to the following facts: that it manufactured the subject engine, S/N L-6590-39A, in 1969 (Doc. 253, ¶ 1); that said engine was installed on the subject Cessna 172N aircraft when it crashed on July 10, 2005 (*Id.* ¶ 3); that the carburetor installed at the time of the 2005 crash was not the same carburetor shipped with its S/N L-6590-39A engine in 1969 (*Id.* ¶ 5); that the carburetor installed at the time of the crash was in fact a replacement carburetor, a Precision MA-4SPA (*Id.* ¶ 5); that the replacement carburetor was completely rebuilt or overhauled by the Kelly Defendants in 2004, which installed new or as new parts and components with the carburetor (*Id.*); and that the Kelly Defendants manufactured the carburetor's replacement component parts, rebuilt or

overhauled the replacement carburetor, and shipped the replacement carburetor. (*Id.* ¶ 6).

In sum, Lycoming contends, and Plaintiff does not dispute, that the Kelly Defendants manufactured, replaced, and shipped the carburetor and its component parts. (Docs. 221, ¶¶ 7-17). Lycoming asserts that its last physical contact with the product was in September of 1969 when it was shipped and placed in long-term storage and that Plaintiff has failed to prove that a defect existed at that time. On this point, we agree with Plaintiff, and will grant summary judgment to the limited extent that Plaintiff's claims may be construed to allege a defect in the engine in 1969. Plaintiff has offered no evidence, expert or otherwise, demonstrating that the engine was defective when it left the Lycoming's Williamsport manufacturing plant in 1969 or that a defect existing at that time caused the 2005 aircraft accident.

However, while Plaintiff does not contest Lycoming's factual recitation thus far, she does disagree with its ultimate legal conclusion—that Lycoming cannot possibly be deemed a manufacturer, seller, or distributor subject to liability for injuries purportedly caused by the allegedly defective carburetor in light of Defendant Precision's manufacture and the Kelly Defendant's overhaul of said product. As she must to satisfy her burden at the summary judgment level, Plaintiff points to several substantial facts of record which Lycoming omits in making its

arguments seeking summary disposition of both claims and submits to the Court that they sufficiently support her claims and warrant submission of the case to a jury.

Specifically, Plaintiff points to the following: that the replacement carburetor on the subject engine at the time of the crash was a Lycoming-approved Marvel Schebler MA-4SPA model 10-5135 carburetor (Doc. 234, ¶ 5); that the MA-4SPA carburetor was manufactured by Defendant Precision and its predecessors pursuant to a licensing agreement with Lycoming (*Id.*); that MA-4SPA carburetors are assigned a Lycoming part number, LW-13659 (*Id.*); that Lycoming holds the FAA Type Certificate for the MA-4SPA model carburetors and that the MA-4SPA carburetor at issue here was manufactured pursuant to Lycoming design drawings, which cannot be modified or altered without approval from Lycoming (*Id.*); that Lycoming approved the allegedly defective throttle body to bowl screw design at issue here (*Id.*); that the subject engine and carburetor were overhauled in 2004 pursuant to Lycoming's manual and Service Bulletin 366 (*Id.* ¶ 6); that Lycoming, in its continued airworthiness instructions, recommends that MA-4SPA carburetors be replaced when an engine is serviced or overhauled (*Id.*); and that Lycoming's Type Certificate Data Sheet ("TCDS") instructs mechanics to

use MA-4SPA replacement carburetors when overhauling this engine. (*Id.*).[3]

Our understanding of Plaintiff's argument, then, is not that Lycoming was the physical manufacturer of the allegedly defective carburetor; indeed, Plaintiff admits that Lycoming's hands did not physically touch the carburetor. (*See* Doc. 234, ¶¶ 7-17). Instead, the argument appears to be that the 2004 overhaul of the engine itself, admittedly physically accomplished by others but pursuant to the strict requirements and direction of Lycoming's manuals and service bulletins, was, in essence, a Lycoming-controlled remanufacture of the engine and its component parts. Thus, it follows that because Lycoming exercised such control over the MA-4SPA carburetor and the engine overhaul in its entirety, Plaintiff's argument would conclude that Lycoming can fairly be said to be a *de facto* manufacturer of the overhauled engine, rendered defective by the replacement carburetor installed pursuant to its direction.[4]

---

[3] Likewise compelling language is found in a 1972 letter the FAA provided to Lycoming with reports of malfunctions within its Marvel Schebler carburetor designs. That letter notes the following: "Marvel Schebler carburetors are a part of the engine type design and are not approved separately. The type certificate holder is responsible for the type design and also the correction of service problems. Marvel Schebler manufactures carburetors under PMA procedures, but this is based on a licensing agreement with the engine manufacturers . . . Service problems which may be design-related should be referred to the engine manufacturer for corrective action." (Doc. 234-13). This language supports Plaintiff's contention a reasonable trier of fact could conclude that Lycoming is, for purposes of products liability, the designer of a defective product.

[4] Relatedly, Plaintiff contends that Lycoming's continued airworthiness instructions, which specifically require the defective throttle body to bowl screws and lock tab washers, and

Lycoming's argument, at first blush, appears sound. A tunnel vision approach to this case—considering Lycoming's limited factual summary—indeed would likely conclude that Lycoming is not possibly a "manufacturer, distributor, or seller." *See Mellon*, 636 A.2d at 191 (negligence product liability); *Kimco Dev. Corp.*, 637 A.2d at 606 (strict product liability). However, Lycoming neglects critical facts regarding its role in the manufacture of the replacement carburetor and the overhaul of the engine; indeed, a reading of Lycoming's papers would could convince a layperson that Lycoming effectively washed its hands of the subject engine in 1969 and has had no control over it since. Review of the record as a whole, however, demonstrates that this is not necessarily the case, and that Plaintiff has created genuine issues of material fact with respect to whether Lycoming is indeed a manufacturer of the defective engine following its 2004 overhaul.

In this Court's opinion, it would entirely defy concepts of fairness and justice and run counter to the considered history of products liability policy to hold

---

which Defendant Kelly was required to follow in overhauling the engine, are also defective and independently support a products liability action. Based upon our analysis herein, we find that the instructions themselves, including Lycoming's overhaul manuals, continued airworthiness instructions, and service bulletins, are part of the design defect itself which led to the ultimate "manufacture" of the defective engine upon its overhaul in 2004. Accordingly, we find it unnecessary to distinguish between the instructions and the product as the ultimate design defect is a culmination of the two.

that a Type Certificate holder who exclusively controls the design and manufacture of replacement component parts and mandates the installation of said parts during an overhaul of its engine could escape liability for a defect in a component part simply because it is not physically involved in the manufacture and installation process. Indeed, in our opinion, sufficient evidence has been submitted from which a reasonable jury could find that, while Lycoming's hands were not physically present in the plant during the manufacture or in the shop during the overhaul, its invisible hands were undeniably present as it was Lycoming's design directive which caused the allegedly defective carburetor to be produced and placed in the engine, ultimately leading to the 2005 crash.

In an instructive and factually similar case, the Pennsylvania Supreme Court held that "the status of type certificate holder and/or designer fall under the umbrella of manufacturer for purposes of GARA." *See Pridgen v. Parker Hannifin Corp. (Pridgen I)*, 905 A.2d 422, 436 (Pa. 2006). In *Pridgen*, the court was addressing issues of GARA repose and not questions of liability as here, but the court's opinion nonetheless aids our conclusion that a Type Certificate holder who knows of an alleged defect and knowingly fails to inform the FAA and ultimate consumer should not be relieved of liability merely because it was not the physical manufacturer of the replacement carburetor. Indeed, the court implied as much in

affirming its decision on rehearing, stating that "in the absence of GARA repose, [Lycoming] might indeed be liable for design defects in a replacement [carburetor] and/or the aircraft systems within which such components function." *Pridgen v. Parker Hannifin Corp. (Pridgen II)*, 974 A.2d 1166, 1172 (Pa. Super. Ct. 2009).

Finally, we would be remiss to turn a blind eye to the public policy rationales which support products liability causes of action. Products liability actions grew out of the need to protect the public from harms most appropriately borne by the manufacturer and to apportion the burden of compensating for that harm to the party most able to bear the loss which, in the great majority of cases, is the negligent manufacturer. *See, e.g.*, *Polius v. Clark Equipment Co.*, 802 F.2d 75, 76-77 (3d Cir. 1986) ("[T]he public policy underlying strict products liability . . . is to protect the injured party by placing the burden on the party most able to bear the loss by spreading the risk.").

A consideration of this public policy ultimately undermines Lycoming's argument and highlights our conclusion that an injustice would be accomplished by permitting a company such as Lycoming to exercise so much control over the manufacturing process while at the same time immunizing itself from liability for defects resulting from its process. Lycoming does not deny that it designed the MA-4SPA carburetor, that its design must be complied with by the manufacturer to

which it granted the design license, that the overhauling mechanic must comply with its design, or that the 2004 overhaul of its engine, including manufacture and installation of an MA-4SPA carburetor allegedly known to have been defective, was in fact accomplished pursuant to its binding designs and mandatory directives.

Ultimately, we agree with Sikkelee that questions of fact abound regarding whether or not Lycoming was the manufacturer of the overhauled engine in 2004. Indeed, to hold otherwise would be to immunize Lycoming from liability arising from defects within its own design. This Court declines to permit Lycoming to shift liability for a defective engine to its physical component part manufacturers and overhauling mechanics simply by physically removing itself from the overhaul process even though its directives control every aspect of said process. Such a decision would fly in the face of justice and defeat the long-established purposes of products liability actions. It is clear to this Court that the record contains ample evidence from which a reasonable finder of fact could conclude that Lycoming is, in essence, a *de facto* manufacturer of the allegedly defective engine upon its 2004 overhaul, subjecting it to products liability under Pennsylvania law.

Accordingly, we find that a genuine issue of material fact exists with regard to whether Lycoming is a manufacturer of the subject engine, allegedly rendered defective in 2004 upon the installation of a carburetor that Lycoming designed and

required to be installed in the subject engine.

B. Strict Liability

Our inquiry does not end with the determination that a reasonable jury could find that Lycoming is a manufacturer with regard to the 2004 engine overhaul. Strict liability also requires a showing that the product was defective and that the defect was the proximate cause of the plaintiff's injuries. However, as exemplified by the parties fervid briefing of the issue, the parameters of the strict liability requirements in Pennsylvania have, for some time, been in a state of flux.

As Lycoming correctly observes, the Third Circuit has twice predicted that the Pennsylvania Supreme Court, when presented with the opportunity to do so, will adopt the Restatement (Third) of Torts ("Restatement Third") to supplant the Restatement (Second) of Torts ("Restatement Second"). *See Covell v. Bell Sports, Inc.*, 651 F.3d 357, 359 (3d Cir. 2011); *Berrier v. Simplicity Mfg. Inc.*, 563 F.3d 38, 46 (3d Cir. 2009). Lycoming thus asserts that pursuant to both *Berrier* and *Covell*, the Plaintiff's strict products liability claim is governed by the Restatement Third. An abbreviated analysis of the intervening case law leads the Court to a different conclusion.

In *Bugosh v. I.U. North Am., Inc.*, 942 A.2d 897 (Pa. 2008), the Supreme Court of Pennsylvania certified for appeal the question of "[w]hether this Court

should apply § 2 of the Restatement (Third) of Torts in place of § 402A of the Restatement (Second) of Torts." *Id.* While that appeal was pending, the Third Circuit in *Berrier* was tasked with predicting how Pennsylvania's highest court would answer this question. The Circuit concluded, after extensive analysis of Pennsylvania law, that the state court would likely adopt the Restatement Third when presented with the opportunity to do so. *Berrier*, 563 F.3d at 46.

Shortly after *Berrier* was decided, the Supreme Court of Pennsylvania, after extensive argument, dismissed the *Bugosh* appeal as improvidently granted; it thus did not decide whether the Restatement Third should definitively become the governing law in Pennsylvania. Not long thereafter, this Court was presented with the question of whether the Restatement Third or Restatement Second should be applied in a diversity action governed by Pennsylvania law in light of the *Berrier* and *Bugosh* actions. In *Milesco v. Norfolk S. Corp.*, 2010 U.S. Dist. LEXIS 780 (M.D. Pa. Jan. 5, 2010), this Court held that "the Pennsylvania Supreme Court's dismissal of *Bugosh* was a clear indication that it intends for the Second [Restatement] to apply in the Commonwealth for the time being." *Id.* at 9-10; *see also Durkot v. Tesco Equip., LLC*, 654 F. Supp. 2d 295, 297 (E.D. Pa. Sept. 9, 2009) (concluding that the court's dismissal of the *Bugosh* appeal was an affirmative declination of the Restatement Third).

As we made clear in our decision in *Milesco* in addressing the conflicting interpretations of the *Bugosh* and *Berrier* interplay, the Third Circuit's prediction in *Covell* is binding upon federal district courts sitting in diversity absent an affirmative indication from the Pennsylvania Supreme Court that it intends to retain the Restatement Second as the law in Pennsylvania. In our opinion, this indication was provided in *Beard v. Johnson & Johnson, Inc.*, 41 A.3d 823 (Pa. 2012), where the Pennsylvania Supreme Court expressly took notice of "the continuing state of disrepair in the arena of Pennsylvania strict-liability" law and nonetheless declined to take the opportunity to replace the Restatement Second with the Restatement Third. *Id.* at 836.[5]

Consistent with our rationale in *Milesco*, we believe that the Pennsylvania Supreme Court, by again declining to take advantage of the opportunity to adopt the Restatement Third, has indicated that the Restatement Second remains the law in Pennsylvania. Indeed, Justice Baer, in a concurring opinion, expressly observed the same, stating that "the current law of Pennsylvania . . . is Section 402A of the Restatement Second." *Id.* at 839 (Baer, J., concurring). Accordingly, we will apply the dictates of the Restatement Second in resolving the strict products liability

[5] Indeed, *Beard* makes it abundantly clear that there remains an ideological split within the Pennsylvania Supreme Court relative to adoption of the Restatement Third. The Third Circuit's prediction in *Covell* assumed the formation of a consensus that has not yet crystalized.

questions in this action.

In Pennsylvania, a manufacturer "is effectively the guarantor of his products' safety." *Salvador v. Atlantic Boiler Co.*, 319 A.2d 903, 907 (Pa. 1974). The Restatement Second subjects to liability anyone "who sells any product in a defective condition unreasonably dangerous to the user or consumer or to his property . . . for physical harm thereby caused to the ultimate user or consumer . . . if (a) the seller is engaged in the business of selling such a product, and (b) it is expected to and does reach the user or consumer without substantial change in the condition in which it is sold." RESTATEMENT (SECOND) OF TORTS § 402A.

Under Pennsylvania's interpretation of the Restatement Second, "the jury may find a defect where the product left the supplier's control lacking any element necessary to make it safe for its intended use or possessing any feature that renders it unsafe for the intended use." *Azzarello v. Black Bros. Co.*, 391 A.2d 1020, 1022 (Pa. 1978). Defective conditions give rise to three types of strict products liability claims: (1) manufacturing defects, (2) design defects, and (3) warning defects. *See French v. Commonwealth Assocs.*, 980 A.2d 623, 632 (Pa. Super. Ct. 2009). Plaintiff's papers are suffused with allegations of negligence, strict liability, and defects, however her actual allegations are less than pellucid. It appears to the Court, however, that she is advancing both a design defect theory and a failure to

warn theory. We address these claims *seriatim*.

1. Design Defect

In *Azzarello v. Black Bros. Co.*, 391 A.2d 1020 (Pa. 1978), the Pennsylvania Supreme Court articulated the definition of a design defect within the context of then-recently adopted Section 402A. The court explained that "a manufacturer . . . is effectively the guarantor of his product's safety" and stated that the "seller must provide with the product every element necessary to make it safe for use." *See id.* at 1026 (quoting *Salvador v. Atlantic Broiler Co.*, 319 A.2d 903, 907 (Pa. 1974); *Berkebile v. Brantley Helicopter Corp.*, 337 A.2d 893, 902 (Pa. 1975)).

Lycoming first submits that Plaintiff cannot prevail on her design defect allegations because Lycoming did not manufacture the allegedly defective part. Having already determined that Lycoming might be subject to liability if the jury concludes that it was a manufacturer and designer of the carburetor and mandated its installation during the overhaul, we dismiss this contention. Lycoming also contends that the Plaintiff has failed to identify a defect in the engine design; it asserts that "[t]he only alleged design element related to the allegedly defective 'fuel metering system' [Plaintiff] identifies is that the engine was carbureted and not fuel injected." (Doc. 276, p. 7). Lycoming submits that utilizing a carburetion system instead of a fuel injection system does not support a design defect claim.

Lycoming's argument not only blatantly mischaracterizes Plaintiff's contentions, but also treads dangerously on the precipice of disingenuity. A review of the record and Plaintiff's submission clearly evidences that the Plaintiff's contention has continually been that the throttle body to bowl system incorporated in the carburetor renders the entire engine defective, that alternative options such as a safety wire would have been safer than the throttle body to bowl system, and that three experts have opined that the defect was not the mere fact of a carburetor system as opposed to a fuel-injected system, but the loosening of the throttle body to bowl assembly utilized by that carburetion system. Accordingly, Lycoming's only argument in this respect is without merit.

Plaintiff, on the other hand, provides abundant evidence to satisfy her burden at the summary judgment stage. Plaintiff's experts have concluded that the defective throttle body to bowl assembly—installed pursuant to Lycoming's Type Certificate design for its O-320 engine—was the cause of the accident.[6] Richard

[6] In its brief in Brief in Support of Motion for Summary Judgment (Doc. 257), Lycoming contends that Plaintiff's expert reports consist entirely of legal conclusions and that their opinions are thus inadmissible. *See, e.g.*, *Berckeley Inv. Grp. v. Colkitt*, 455 F.3d 195, 217 (3d Cir. 2006). A review of the expert's submissions, however, indicates that this is not the case. The report of each of the Plaintiff's experts review the type certificate and the design drawings of the MA-4SPA carburetor and the O-320 engines, specifically focusing on the safety of the throttle body to bowl assembly, and address whether or not the defective assembly was a proximate cause of the 2005 aircraft accident. (*See, e.g.*, Doc. 234-4, ¶¶ 5.0, 6.10-.13; Doc. 234-5, p. 24; Doc. 234-6, pp. 15-16, 34). We thus summarily reject this argument.

H. McSwain, Ph.D, P.E., concludes that the "Lycoming LW-13659, Model MA-4SPA, carburetor has multiple failure modes that are related to design, materials selection, and construction that have the potential to cause in-service carburetor and engine malfunction" and that the throttle body to bowl assembly did in fact fail in the accident aircraft. (Doc. 234-4, ¶¶ 5.0, 6.10-.13). William R. Twa, Jr., in his report, recounts the lengthy history of the defect and concluded that the carburetor design and continued airworthiness instructions for overhauling the engine, including the mandated inclusion of a carburetor designed consistent with Lycoming's Type Certificate, are defective. (Doc. 234-5, p. 24).

Mr. Donald E. Sommer, P.E., also reviewed the history of the loosening throttle body to bowl assemblies. (Doc. 234-6, pp. 15-20). He investigated the subject engine after the crash and noted that the carburetor bowl screws were indeed loose. (*Id.*). After investigation, Mr. Sommer concluded that "[t]he accident O-320 MA-4SPA carburetor is unreasonably dangerous and caused the death of David Sikkelee," that Lycoming "failed to exercise reasonable care in the design, manufacture, and support of the accident aircraft's engine and carburetor," and that Lycoming's O-320-D2C engine "is a defective engine due to the incorporation of the Precision MA-4SPA carburetor." (*Id.* p. 34).

Lycoming has thus failed to present any law or evidence to this Court which

requires summary dismissal of the Plaintiff's design defect claim. Plaintiff has established by expert and other evidence that a design defect existed which a jury could reasonably conclude was the proximate cause of the accident. Plaintiff has further demonstrated that alternative designs were feasible and contemplated but, ultimately, rejected by Lycoming in favor of the defective throttle body to bowl assembly herein at issue. Thus, as Plaintiff has overcome her burden and presented evidence which, viewed in a light most favorable to her, creates genuine issues of fact to be determined by a jury, we will deny summary judgment on the Plaintiff's design defect claims.

2. Failure to Warn

A manufacturer is subject to failure to warn liability where a product contains a defect and "was distributed without sufficient warnings to notify the ultimate user of the dangers inherent in the product." *Donoughe v. Lincoln Elec. Co.*, 936 A.2d 52, 61-62 (Pa. Super. Ct. 2007). We have already stated above that the Plaintiff has presented enough evidence to support a finding that Lycoming's design was defective and a finding that said defective design was the proximate cause of the 2005 airplane crash. Thus, we must consider for this analysis only whether Lycoming failed to adequately warn of the defective carburetor installed within its engine pursuant to its mandate.

Lycoming again relies on its contention that it is not a “manufacturer” and thus fails to offer any evidence to disprove or dispute Plaintiff’s allegation that it should have, and failed to, provide warnings regarding the defective carburetor design incorporated in its O-320 series engines advising potential users of the known dangers associated with the loosening throttle body to bowl assembly. Instead, Lycoming maintains only that it did not “manufacture” the product, an argument disposed of above.

Plaintiff cites to Lycoming’s continuing airworthiness instructions and manual, void of any warning with respect to the defective carburetor design, as proof that Lycoming has failed to warn of a dangerous defect. Further, Plaintiff notes a complete lack of reports to the FAA regarding the various defects and malfunctions regarding the throttle body to bowl assembly. Without any argument or contradictory evidence presented by the Defendant to prove otherwise, ample evidence exists to put this issue to the jury. The evidence, viewed in a light most favorable to the Plaintiff, establishes a dearth of warnings from Lycoming with respect to an allegedly defective product, sufficient to survive summary judgment on her failure to warn claim.

B. Negligence

As with the strict liability claim, our negligence analysis is not complete

simply because genuine issues of material fact remain with respect to Lycoming's manufacturer status. Lycoming additionally contends that the Plaintiff has failed to establish the remaining elements of its negligence claim—that is, Lycoming asserts that Plaintiff has failed to submit evidence from which a jury could conclude that it breached an applicable standard of care and that said breach resulted in defects that proximately caused Plaintiff's injuries. (Doc. 276, pp. 7-9).

Lycoming states, correctly, that the Plaintiff's burden of proof on a strict liability negligence claim is to "show that the defendant had a duty to conform to a certain standard of conduct, that the defendant breached that duty, that such breach caused the injury in question, and actual loss or damage." *Phillips v. Cricket Lighters*, 841 A.2d 1000, 1008 (Pa. 2003). In the products liability context, the duty of care arises where a reasonable jury might find that the defendant is a manufacturer, seller, or distributor of the allegedly defective product. *See Mellon*, 636 A.2d at 191. Here, we have concluded that the jury could reasonably attribute just such a duty to Lycoming in light of its control over the design, manufacture, and overhaul of the MA-4SPA carburetor and engine.

We have previously held that federal standards of care promulgated by the FAA apply in aviation cases such as this one and accordingly granted the Plaintiff leave to amend her negligence claims in order to fully state the federal standards

which she believes control. *See Sikkelee v. Precision Airmotive Corp.*, 731 F. Supp. 2d 429, 438 (M.D. Pa. 2010). Plaintiff, in her Second Amended Complaint, asserts that Lycoming has breached copious federal standards in its promulgation of a defective design, mandated installation of the defective product, and failure to report the same, more specifically as follows:

- by not submitting truthful submissions to the FAA, including mandated reports of malfunctions and defects, in violation of 14 C.F.R. §§ 21.2, 21.3, 21.14, 21.21, 33.35, and 33.4;

- by incorporating design features or details which experience has shown to be hazardous or unreliability in violation of 14 C.F.R. § 33.15 and CAR § 13.100, 13.101, and by willfully concealing the same from the FAA in violation of mandatory reporting requirements

- knowingly designing or constructing an engine part which permits an unsafe condition of the engine between overhaul periods in violation of 14 C.F.R. § 33.19 and Civil Air Regulation ("CAR") § 13.104

- by designing and constructing a fuel supply system which did not ensure an appropriate mixture of fuel to the cylinders under all flight and atmospheric conditions in violation of 14 C.F.R. § 33.35 and CAR § 13.110

- by issuing continued airworthiness instructions which were defective as to the throttle body to bowl assembly for the MA-4SPA carburetor in violation of 14 C.F.R. § 33.4

- by holding the Type Certificate for a defective product and failing to report known malfunctions to the FAA regarding that defective product within twenty-four (24) hours after it

discovered said malfunctions in violation of 14 C.F.R. §§ 21.3, 21.303;

- by operating as an FAA licensed and certified repair facility and failing to make known to the FAA the defect in the carburetor design within ninety-six (96) hours of discovery of the defect in violation of 14 C.F.R. § 145.221(a);

- and by knowingly misrepresenting and willfully concealing the defect in the throttle body to bowl screws and attachment problems to the FAA in violation of 14 C.F.R. § 21.3.

The Plaintiff contends that, as an entity causing a product to be cast into the stream of commerce, Lycoming had the duty to abide by the above regulations. The parties' briefs focus primarily on the issue of whether or not Lycoming is a manufacturer, hence our detailed analysis of that issue and the parties respective positions above. Lycoming does not offer much argument with respect to the remaining elements of a negligence claim and we thus briefly engage in a largely independent analysis with respect to these elements.

To establish breach of the above standards, Plaintiff cites to the following facts: Lycoming approved the design change to the throttle body to bowl screw and assembly at issue while there were feasible design alternatives available (Doc. 268, ¶ 15); Lycoming required the defective throttle body to bowl screw and assembly at issue to be utilized by overhaulers such as the Kelly Defendants when overhauling the O-320 engine (*Id.* ¶ 17); Lycoming issued SB 366 in attempt to

alleviate the problem of loosening throttle body to bowl screws on MA-4SPA carburetors in its O-320 engines (*Id.* ¶ 19; Doc. 234-10); and Lycoming did not report this known defect to the FAA (Doc. 268, ¶¶ 7-8). Further, Plaintiff's experts, including an aircraft certification consultant and licensed mechanical engineers involved in forensic engineering and aircraft accident reconstruction, concluded that the O-320 engine at issue in this case was rendered defective by the mandated inclusion of a carburetor known to be defective. (*Id.* ¶ 20 (citing Doc. 234-5, pp. 22-26; Doc. 234-6, pp. 15)).

To prove that Lycoming was aware of the defect, Plaintiff points to two letters from Precision Airmotive to Mr. Rick Moffett at Lycoming on September 8, 2004 and November 8, 2004 advising Lycoming, as the Type Certificate holder for MA-4SPA carburetors, of loose throttle body to bowl issues related specifically to the Lycoming O-320 engine which had been occurring since Lycoming made the design change in 1965; the letter asked that Lycoming, as the Type Certificate holder, help research and alleviate the problem. (Doc. 268, ¶ 19 (quoting Doc. 234-14, pp. 3-4)). During his deposition, Mr. Moffett confirmed receipt of these letters; he stated that he may have forwarded the letter to the legal department, but took no other action. (*Id.* ¶ 22-23 (citing Doc. 234-7, pp. 74-75, 86-87).

This evidence, viewed in the light most favorable to Plaintiff as it must be at

this stage, creates a genuine issue of material fact with respect to Lycoming's alleged breach of federal standards of care governing it. A reasonable trier of fact could find from this evidence that Lycoming manufactured a defective product in violation of the FAA's regulations and that it was aware of the defect and failed to remedy it or notify the FAA as mandated by federal law.

Finally, we reach the question of causation. Based on the evidence presented to the Court by the Plaintiff, it is clear that questions of fact remain with respect to the issue of causation and that the question is thus undisputably within the province of the jury and not the Court. Plaintiff has provided ample evidence from which a reasonable trier of fact could conclude that the defective engine was the cause of the 2005 aircraft accident from which Plaintiff's injuries arose, most specifically, the following.

Plaintiff's experts have concluded that the defective throttle body to bowl assembly installed pursuant to Lycoming's instructions on Lycoming's O-320 engine was the cause of the accident. Richard H. McSwain, Ph.D, P.E., concludes in his report that the "Lycoming LW-13659, Model MA-4SPA, carburetor has multiple failure modes that are related to design, materials selection, and construction that have the potential to cause in-service carburetor and engine malfunction" and that the throttle body to bowl assembly did in fact fail in the

accident aircraft. (Doc. 234-4, ¶¶ 5.0, 6.10-.13). William R. Twa, Jr., in his report, detailed the lengthy history of the defect and concluded, among other things, that the design and continued airworthiness instructions for maintaining and overhauling the Lycoming LW-13659, MA-4SPA carburetor are defective. (Doc. 234-5, p. 24).

The report of Mr. Donald E. Sommer, P.E., is perhaps the most inculpative. Mr. Sommer reviewed the considerable history of the loosening throttle body to bowl assemblies and Lycoming's decades-long knowledge thereof. (Doc. 234-6, pp. 15-20). In addition, he investigated the subject engine and crash site, noting that the carburetor bowl screws were indeed loose at the time of the accident and concluding that "[t]he accident O-320 MA-4SPA carburetor is unreasonably dangerous and caused the death of David Sikkelee." (*Id.* pp. 15-20, 34). He further reports that Lycoming's continued airworthiness instructions for the carburetor were defective, that Lycoming "failed to exercise reasonable care in the design, manufacture, and support of the accident aircraft's engine and carburetor," and that the O-320-D2C engine "is a defective engine due to the incorporation of the Precision MA-4SPA carburetor." (*Id.*).

By presenting this evidence to the Court, the Plaintiff has created a genuine issue of material fact for the jury with respect to whether Lycoming breached the

applicable federal standards of care by negligently designing a defective product that proximately caused the death of the Plaintiff's decedent and substantial injury to the Plaintiff's brother. Accordingly, we will deny Lycoming's Motion as it pertains to Plaintiff's negligence claim.

V. CONCLUSION

For all of the reasons articulated above, we will grant Lycoming's Motions to the extent that they relate to the 1969 engine manufacture as the Plaintiff has failed to present any evidence which indicates that the engine as it left Lycoming's plant in 1969 was defective. All the same, for the reasons detailed at length above, the Court finds that genuine issues of material fact remain with regard to whether Lycoming is a manufacture relative to the defective carburetor and overhaul of the engine in 2004, whether a defect existed, and whether said defect proximately caused the Plaintiff's injuries. We will thus deny the Motions to the extent they relate to the 2004 overhaul of the subject engine.

NOW, THEREFORE, IT IS HEREBY ORDERED THAT:

1. Lycoming's Motion for Partial Summary Judgment (Doc. 220) and Motion for Summary Judgment (Doc. 252) are **GRANTED** to the extent that they seek judgment as a matter of law with respect to the condition of the engine in 1969.

2. Lycoming's Motion for Partial Summary Judgment (Doc. 220) and Motion for Summary Judgment (Doc. 252) are **DENIED** in all other respects. The case shall proceed on the negligence and strict liability design defect theories asserted by the Plaintiff as they relate to the 2004 engine overhaul.

3. The parties **SHALL FILE** a stipulation identifying new case management deadlines in accordance with the Court's calendar, as attached hereto, within twenty (20) days of today's date.

/s John E. Jones III
John E. Jones III
United States District Judge

Judge Jones
2012 Court Ca1endar

Trial List	**Discovery Cut-off**	**Dispositive Motions Cut-off**	**Final Pre-Trial Conferences**	**Jury Selection**
January	~~7/29/11~~	~~9/1/11~~	~~12/1/11~~	~~1/4/12~~
February	~~8/31/11~~	~~10/3/11~~	~~1/3/12~~	~~2/2/12~~
March	~~9/30/11~~	~~11/1/11~~	~~2/1/12~~	~~3/2/12~~
April	~~10/31/11~~	~~12/1/11~~	~~3/1/12~~	~~4/3/12~~
May	~~11/30/11~~	~~1/2/12~~	~~4/2/12~~	~~5/2/12~~
June	~~12/30/11~~	~~2/1/12~~	~~5/1/12~~	~~6/4/12~~
July	~~1/31/12~~	~~3/1/12~~	~~6/1/12~~	~~7/5/12~~
August	~~2/29/12~~	~~4/2/12~~	~~7/2/12~~	~~8/2/12~~
September	~~3/30/12~~	~~5/1/12~~	8/1/12	9/5/12
October	~~4/30/12~~	~~6/1/12~~	9/4/12	10/2/12
November	~~5/31/12~~	~~7/2/12~~	10/1/12	11/2/12
December	~~6/29/12~~	~~8/1/12~~	11/1/12	12/5/12

Case Management Conferences:

1/31/12
2/28/12
3/30/12
4/30/12
5/30/12
6/29/12
7/31/12
8/31/12
9/28/12
10/31/12
11/30/12
12/31/12

Judge Jones
2013 Court Calendar

Trial List	Discovery Cut-off	Dispositive Motions Cut-off	Final Pre-Trial Conferences	Jury Selection
January	7/30/12	9/3/12	12/3/12	1/3/13
February	8/31/12	10/1/12	1/2/13	2/4/13
March	9/28/12	11/1/12	2/1/13	3/4/13
April	10/31/12	12/3/12	3/1/13	4/2/13
May	11/30/12	1/1/13	4/1/13	5/2/13
June	12/31/12	2/1/13	5/1/13	6/4/13
July	1/31/13	3/1/13	6/3/13	7/2/13
August	2/28/13	4/1/13	7/1/13	8/2/13
September	3/29/13	5/1/13	8/1/13	9/4/13
October	4/30/13	6/3/13	9/3/13	10/2/13
November	5/31/13	7/1/13	10/1/13	11/4/13
December	6/28/13	8/1/13	11/1/13	12/3/13

Case Management Conferences:

1/30/13
2/27/13
3/27/13
4/30/13
5/31/13
6/28/13
7/31/13
8/30/13
9/30/13
10/30/13
11/27/13
12/30/13

IN THE UNITED STATES DISTRICT COURT
FOR THE MIDDLE DISTRICT OF PENNSYLVANIA

JILL SIKKELEE, Individually and as Personal Representative of the ESTATE OF DAVID SIKKELEE, deceased,	:	No. 4:07-CV-00886
	:	(Judge Brann)
Plaintiff,	:	
v.	:	
AVCO CORPORATION, *et al.*,	:	
Defendants.	:	

MEMORANDUM OPINION

AUGUST 3, 2017

A weightless innocence so often attends our daydreams of flight. As the American aviator John Gillespie Magee, Jr., loftily described it, pilots "dance[ ] the skies on laughter-silvered wings," soaring "high in the sunlit silence."[1] Sadly, it would seem that Magee's "high untrespassed sanctity of space" must belong to a universe far away from the dark origins and convoluted history of this case.

Initiated in 2007, two years after David Sikkelee, Jr., died in a fiery plane crash, the instant litigation has charted an eventful path full of intricate factual, legal, and regulatory detours. At its core is an allegation by the Plaintiff that her deceased husband's plane lost power when screws that held the engine's carburetor

[1] John Gillespie Magee, Jr., "High Flight" (1941).

together came loose. AVCO Corporation's Lycoming Engine division (hereinafter "Lycoming"), who filed the two pending motions, did not manufacture or install the carburetor that powered the aircraft on that fateful day.

In January 2013, the matter was reassigned to me, and in September 2014, relying upon *Abdullah v. American Airlines, Inc*. 181 F.3d 363 (3d Cir. 1999), I held that Plaintiff's state tort claims against Lycoming were field preempted by Federal Aviation Administration (FAA) regulations. *Sikkelee v. Precision Airmotive Corp.*, 45 F. Supp. 3d 431 (M.D. Pa. 2014). In April 2016, during the ensuing interlocutory appeal, the United States Court of Appeals for the Third Circuit repudiated *Abdullah's* breadth but instructed me to consider whether Plaintiff's state law claims might nevertheless be conflict preempted. *Sikkelee v. Precision Airmotive Corp.*, 822 F.3d 680 (3d Cir. 2016). Thereafter, in November 2016, the Supreme Court of the United States denied Lycoming's petition for a writ of certiorari. *AVCO Corp. v. Sikkelee*, 137 S. Ct. 495 (2016).

On remand, Lycoming has submitted two new motions for summary judgment. One motion challenges the extent of Lycoming's liability for third-party modifications; the other sounds in recent conflict preemption jurisprudence. I conducted oral argument on May 19, 2017 and received supplemental briefing.

Lycoming has on numerous occasions vociferously challenged a prior decision in this case that exposed it to liability for subsequent modifications made

by an aftermarket parts manufacturer. That holding was reached by my colleague, the Honorable John E. Jones III, to whom this matter was originally assigned. In particular, Judge Jones concluded that Lycoming, a type certificate holder, could be held liable for modifications made by the third-party manufacturer who overhauled the engine's carburetor. In Judge Jones's view, "while Lycoming's hands were not physically present in the plant during the manufacture or in the shop during the overhaul, its invisible hands were undeniably present." ECF No. 299 at 17.

Although I have previously expressed skepticism at this holding, it is evident now, with the benefit of thorough argument, that this expanded notion of liability is unsupported by the law and is partially responsible for sending this litigation into an academic tailspin. One might say that since I was first assigned to this matter, "I have acquired new wisdom . . . or, to put it more critically, have discarded old ignorance." *Ring v. Arizona*, 536 U.S. 584, 611 (2002) (Scalia, J., concurring). Now having gained familiarity with the applicable regulations, the FAA approvals, and the production history at issue here, I must conclude that Lycoming's connection to the allegedly defective component was too far removed to subject it to tort liability. Indeed, the third-party manufacturer, without Lycoming's knowledge or approval, acted pursuant to its own aftermarket parts agreement

when it overhauled the carburetor in a manner that Lycoming could never have foreseen. Summary judgment is warranted on that ground alone.

Further, by arguing that those subsequent carburetor modifications were attributable to Lycoming because the third-party manufacturer was bound by regulation to follow the type certificate holder's designs, Plaintiff has chanced upon a second reason why her claims must fail: they are conflict preempted. Because it was impossible for Lycoming and the aftermarket parts manufacturer to unilaterally comply with both state tort law and federal regulations, as in *Mutual Pharmaceutical Co. v. Bartlett*, 133 S. Ct. 2466 (2013), and *PLIVA, Inc. v. Mensing*, 564 U.S. 604 (2011), I will grant summary judgment in Lycoming's favor on this independent ground.

I. BACKGROUND

As the late Honorable Robert H. Jackson, Associate Justice of the Supreme Court, once remarked, "Planes do not wander about in the sky like vagrant clouds. They move only by federal permission, subject to federal inspection, in the hands of federally certified personnel and under an intricate system of federal commands." *Northwest Airlines v. State of Minnesota*, 322 U.S. 292, 303 (1944). Justice Jackson's observation sprang from "the national responsibility for regulating air commerce" and reinforced the notion that the "air is too precious as an open highway to permit it to be owned" by local interests. *Id.* "Local exactions

and barriers to free transit in the air would neutralize its indifference to space and its conquest of time." *Id.*

Nearly three-quarters of a century later, Justice Jackson's prescient concerns about an excessively splintered airway regulatory system ring just as true. Indeed, those animating federalist principles are precisely why Congress has established an administration whose sole mission is to assure the safety of our nation's skies. This background section examines the FAA's intricate framework of regulations, a fraction of whose existence Justice Jackson could only imagine in 1944. It then connects those regulations to the narrative of this case.

A. In 1958, Congress Creates The Federal Aviation Agency And Bestows Upon It Dominion Over The Skies.

Congress passed the Federal Aviation Act of 1958 to regulate aviation in a way that would "best foster its development and safety" and would ensure the "safe and efficient use of the airspace." 85 Pub. L. No. 726, 72 Stat. 731. The Act created the position of an Administrator who would be appointed by the president to head the agency. 49 U.S.C. §§ 106(b). As part of his official role, the Administrator must prescribe, among other regulations, minimum standards for the design, construction, inspection, and overhauling of aircraft and their engines. *Id.* § 44701(a)(1)–(2).

Concerned with a lack of coordination amongst our nation's transportation systems, President Lyndon B. Johnson worked jointly with Congress to create the

Department of Transportation (DOT) in 1967, at which time the Federal Aviation Agency was renamed the Federal Aviation Administration (FAA) and brought within the DOT's purview. *See A Brief History of the FAA*.[2] Since that time, the FAA has continued to fulfill its regulatory mission, and today, its nearly 50,000 employees make it the largest subdivision within the DOT. *See FACT SHEET*.[3] Recent estimates suggest that more than 1.7 million passengers board a flight in the United States every day, and the FAA oversees more than 50 million commercial, military, and general aviation flights per year. *See id.*

Acting on the powers vested in it by Congress through the Federal Aviation Act and corresponding grants, the FAA has littered the books with a maze of regulations not readily traversed by most laypersons. Like other parallel regulatory regimes that have exposed state tort claims to conflict preemption defenses, *Mutual Pharmaceutical Co. v. Bartlett*, 133 S. Ct. 2466 (2013) (FDA drug regulations); *PLIVA, Inc. v. Mensing*, 564 U.S. 604 (2011) (same), the FAA's regulations are highly particularized, govern nearly every aspect of the regulated field, and are born from the twin aims of ensuring the safety of consumers and protecting the public. *See, e.g.*, *Elsworth v. Beech Aircraft Corp.*, 691 P.2d 630, 636 (Cal. 1984)

---

[2] https://www.faa.gov/about/history/brief_history/.

[3] https://www.faa.gov/news/press_releases/news_story.cfm?newsId=12903.

(FAA regulations protect not only "those who fly in airplanes" but also anyone "affected by their flight").

The FAA's regulations, found at Title 14 of the Code of Federal Regulations, are divided into three volumes, sixty-eight parts, and thousands more detailed subparts. *See Overview—Title 14 of the Code of Federal Regulations*, at 12–1.[4] Volume I contains those FAA regulations governing definitions (Parts 1 & 3); procedure (Parts 11, 13, 14, 15, 16, & 17); and aircrafts (Parts 21, 23, 25, 27, 29, 31, 33, 34, 35, 36, 39, 43, 45, 47 & 49). Volume II contains the regulations governing airmen (Parts 61, 63, 65, & 67); airspace (Parts 71, 73, & 77); air traffic and operation (Parts 91, 93, 95, 97, 99, 101, 103, & 105); and air carriers (Parts 119, 121, 125, 129, 133, 135, 136, 137, & 139). Volume III covers flight schools (Parts 141, 142, 145 & 147); airports (Parts 150, 151, 152, 155, 156, 157, 158, 161, & 169); navigational facilities (Parts 170 & 171); administrative regulations (Parts 183, 185, 187, 189, & 193); and insurance (Part 198). *Id.* at 12–2. In fact, the FAA typically only assigns odd numbers to its major batches of regulations in order to leave room for new regulations that will eventually fill in the even-numbered gaps. *See id.* at 12–3.

According to an FAA letter brief submitted to the Third Circuit in this case, the FAA has instituted a three-stage process to ensure that all new aircrafts and

[4] https://www.faa.gov/regulations_policies/handbooks_manuals/aircraft/amt_handbook/media/FAA-8083-30_Ch12.pdf.

components comply with established design standards. *See* FAA Ltr. Br., ECF No. 534-1, at 4 (hereinafter "FAA Ltr. Br."). These three steps are: (1) type certification; (2) production certification; and (3) airworthiness certification. For the purpose of resolving the pending motions, I will review the pertinent regulations with an emphasis on those comprising type certification. Then, I will discuss how a type certificate might be amended and how aftermarket manufacturers who do not possess the type certificate nevertheless may produce replacement parts by way of a "Parts Manufacturer Approval." Finally, I will explain how those regulations apply to this dispute.

B. Obtaining A Type Certificate Is An Onerous Process Requiring Numerous Submissions That Precisely Detail The Specifications Of The Proposed Aircraft, Its Engine, And Related Components.

The first step in production requires a manufacturer who wishes to produce a new aircraft, aircraft engine, or propeller to obtain a "type certificate." A type certificate confirms that the aircraft or its component is properly designed and manufactured, and satisfies all applicable regulatory standards. *See id. See also* 49 U.S.C. § 44704(a); 14 C.F.R. § 21.21. A manufacturer must obtain a type certificate before producing a new aircraft or engine, unless a type certificate already exists for the precise design or it has a licensing agreement to produce the aircraft or engine with the type certificate holder. 14 C.F.R. § 21.6.

All type certificate applications are required to be completed on a form and in a manner prescribed by the FAA. *Id.* § 21.15. They are submitted to the appropriate aircraft certification office and must be accompanied by a three-view drawing of the aircraft, available preliminary basic data, a description of the engine design features, the engine operating characteristics, and the proposed engine operating limitations. *Id.* § 21.15. A type certificate application must demonstrate compliance with all applicable regulatory requirements, must provide the FAA the means by which such compliance has been shown, and must also supply a statement certifying as much. *Id.* § 21.20.

An applicant may not obtain a type certificate unless the FAA Administrator expressly finds that the proposed aircraft, aircraft engine, propeller, or appliance is "properly designed and manufactured, performs properly, and meets the regulations and minimum standards." 49 U.S.C. § 44704(a). Indeed, 14 C.F.R. § 21.21 (entitled "Issue of type certificate: normal, utility, acrobatic, commuter, and transport category aircraft; manned free balloons; special classes of aircraft; aircraft engines; propellers") instructs applicants as follows:

> An applicant is entitled to a type certificate for an aircraft in the normal, utility, acrobatic, commuter, or transport category, or for a manned free balloon, special class of aircraft, or an aircraft engine or propeller, if—
>
> . . .

(b) The applicant submits the type design, test reports, and computations necessary to show that the product to be certificated meets the applicable airworthiness, aircraft noise, fuel venting, and exhaust emission requirements of this subchapter and any special conditions prescribed by the FAA, and the FAA finds—

(1) Upon examination of the type design, and after completing all tests and inspections, that the type design and the product meet the applicable noise, fuel venting, and emissions requirements of this subchapter, and further finds that they meet the applicable airworthiness requirements of this subchapter or that any airworthiness provisions not complied with are compensated for by factors that provide an equivalent level of safety; and

(2) For an aircraft, that no feature or characteristic makes it unsafe for the category in which certification is requested.

As that regulation makes clear, the FAA must receive a number of submissions, including the type design, test reports, and computations that show that the product for which certification is sought meets all applicable regulatory standards. This process is often "intensive and painstaking": a commercial aircraft manufacturer seeking a new type certificated aircraft might submit 300,000 drawings, 2,000 engineering reports, and 200 other reports in addition to completing approximately 80 ground tests and 1,600 hours of flight tests. *Sikkelee*, 822 F.3d at 684–85 (citing *United States v. S.A. Empresa de Viacao Aerea Rio Grandense (Varig Airlines)*, 467 U.S. 797, 805 n. 7 (1984)).

The "type design" portion of the type certificate application is governed by 14 C.F.R. § 21.31. Under that regulation, the type design must consist of: (1) drawings and specifications; (2) structural information on materials and dimensions; (3) a showing of continued airworthiness; (4) inspection and preventative maintenance programs; and (5) any other information relevant to airworthiness, noise, fuel venting, and emissions determinations. In addition, the type certificate applicant must submit to the FAA a statement confirming that the manufactured aircraft engine or propeller presented for certification in fact conforms to its submitted type design. *Id.* § 21.53(a).

The concept of "airworthiness" as the type design regulation refers to it, is explained in greater detail at 14 C.F.R. § 23 for aircrafts and at 14 C.F.R. § 33 for aircraft engines. For instance, § 21.23 (aircrafts) contains subparts on flight (§§ 23.21–23.255); structure (§§ 23.301–23.575); design and construction (§§ 23.601–23.871); powerplant (§§ 23.901–23.1203); equipment (§§ 23.1301–23.1461); and operating limitations and information (§§ 23.1501–23.1589).

As to an engine specifically, the airworthiness regulations require that its materials be established on the basis of experience or tests and conform to approved specifications that ensure their strength and continued durability. *Id.* § 33.15. A separate regulation provides that an engine's design and construction "must minimize the development of an unsafe condition of the engine between

overhaul periods." *Id.* § 33.19(a). Other regulations governing engine construction in general pertain to engine mounting attachments (§ 33.23) and engine instrument connections (§ 33.29).

Fueling mechanism are regulated in part by 14 C.F.R. § 33.35(a), which requires that a reciprocating or piston engine's fuel injection system "be designed and constructed to supply an appropriate mixture of fuel to the cylinders throughout the complete operating range of the engine under all flight and atmospheric conditions." One regulation in that subpart also requires that the engine be designed and constructed in such a way that avoids excessive stress or vibrations. *Id.* § 33.33. Another regulation also governs an engine's lubrication system. *Id.* § 33.39.

In addition to the type design and its components, all type certificate applicants must permit the FAA to conduct any necessary inspections, flight tests, and ground tests necessary to show that the proposed product satisfies all applicable regulations. *Id.* § 21.33. These inspections ensure, among other things, that (1) the proposed product complies with the applicable airworthiness, aircraft noise, fuel venting, and exhaust emission requirements; (2) materials and products conform to the specifications in the type design; (3) parts of the products conform to the drawings in the type design; and (4) the manufacturing processes,

construction and assembly conform to those specified in the type design. *Id.* § 21.33(b).

Once the applicable ground tests and compliance are completed, the applicant must conduct flight tests to determine whether there is reasonable assurance that the aircraft, its components, and its equipment are reliable and functioning properly. *Id.* § 21.35(b)(2). Such tests require upwards of 150 to 300 hours of flight time, depending upon whether the particular engine type was already incorporated in an earlier type certificated aircraft. *Id.* § 21.35(f)(1)–(2). By regulation, these flight tests must be conducted by a certified pilot. *Id.* § 21.37. The applicant must also submit all reports regarding calibration of testing instruments and allow the FAA to audit the accuracy of those reports. *Id.* § 21.39.

Importantly, every type certificate "is considered to include" the type design, the operating limitations, the certificate data sheet, and other applicable specifications submitted thereto. *Id.* § 21.41.

The type certificate data sheet, which § 21.41 explicitly incorporates into the type certificate itself, has been defined in various FAA orders as "the part of the type certificate documenting the conditions and limitations necessary to meet certification airworthiness requirements." *See* FAA Order 8110.4C, *Type Certification*, at 68 (hereinafter "FAA Type Certification Order").[5] The type

[5] https://www.faa.gov/documentLibrary/media/Order/FAA_Order_8110_4C_Chg_6.pdf.

certificate data sheet "provid[es] a concise definition of the configuration of a type-certificated product" and "is necessary to enable any person to easily find information about a specific product." *Id.* In other words, it "records the type certification data of a product (such as control surface movement limits, operating limitations, placards, and weight and balance) that may also be available in the flight manual or maintenance manual in accordance with FAA Order 8110.4." *See* FAA Order 8110.121, *Type Certificate Data Sheet Notes*, at 2 (hereinafter "FAA TCDS Order").[6] Although 14 C.F.R. § 21.41 does not separate the type certificate data sheet into a main section and a notes section, the FAA has elected to do so for clarification and standardization purposes. *Id.*

A type certificate remains effective until it is surrendered, suspended, revoked, or a termination date set by the FAA has passed. *Id.* § 21.51. Holders of type certificates and other related production authorizations have a continuing duty to report known defects, failures, and malfunctions to the extent that they result in any of a number of enumerated occurrences. *Id.* § 21.3.

C. A Type Certificate Holder May Not Independently Change A Type Certificate's Type Design Details Without First Obtaining FAA Approval.

A type certificate holder may not implement type design changes absent the FAA first explicitly approving such modifications. Command of several of the

[6] https://www.faa.gov/documentLibrary/media/Order/FAA_Order_8110_121.pdf.

regulations' terms of art is required to see why this is so. The FAA has set forth two types of modifications relevant here: (1) alterations and (2) type design changes.[7] The regulations conceive of type design changes as a specific subset of alterations that would modify the type design. Recall that the regulations make clear that the "type design" includes all pertinent drawings and specifications necessary to define the configuration and the design features of the product; information on dimensions, materials, and processes necessary to define the structural strength of the product; and the required airworthiness criteria. 14 C.F.R. § 21.31.

To add an additional layer of classification, the regulations also define all alterations and type design changes as "major" or "minor." The definition of a major alteration is not coextensive with that of a major type design. Consequently, a major alteration need not also be a major type design change. This background is important because the particular form of FAA approval necessary depends upon whether the proposed modification is a major or minor alteration and on whether it

[7] The regulations name a third category: "repairs," which mirror alterations. However, because Plaintiff's proposed modifications constitute alterations and not repairs, I focus on the former. *See* FAA Order 8110.37E, *Designated Engineering Representative (DER) Handbook*, https://www.faa.gov/documentLibrary/media/Order/8110.37E.pdf, at 27 (hereinafter "FAA DER Handbook"). ("A *repair* is the restoration of a damaged product or article accomplished in such a manner and using material of such quality that its restored condition will be at least equal to its original or properly altered condition. . . . An *alteration* is the modification of an aircraft from one sound state to another sound state; the aircraft meets the applicable airworthiness standards both before and after the modification.").

constitutes a major or minor type design change (if it constitutes a type design change at all).

To be clear from the outset, the regulations and the FAA's interpretation of its own regulations make explicit that FAA approval is required to implement all type design changes, regardless of whether they are major or minor. As the FAA has previously explained to our Court of Appeals during this litigation, "Certain 'minor' changes, defined by regulation, may not require an amended or supplemental type certificate, but are still subject to approval by the FAA." FAA Ltr. Br. at 5 (citing 14 C.F.R. § 21.95). "[N]o matter what role a manufacturer plays in the type-certification process, the decision to approve the type design ultimately rests with the FAA." FAA Ltr. Br. at 15. "This is true even for 'minor' type design changes, 14 C.F.R. § 21.93(a), which are approved under a method acceptable to the FAA." *Id.* Thus, as I will discuss more fully herein, to the extent that Plaintiff's tort claims are premised on a modification that would have constituted a type design change, her tort claims fail on conflict preemption grounds.

I note that the FAA's interpretation of its own regulations, as provided in the cited Letter Brief, is not plainly erroneous or inconsistent with the regulations' text. *See Auer v. Robbins*, 519 U.S. 452 (1997). To begin with, 14 C.F.R. § 21.93(a) provides that a "minor change" has no appreciable effect on the weight,

balance, structural strength, reliability, operational characteristics, or other characteristics of the aircraft.[8] All other changes are major changes. *Id.* The regulations further clarify that major changes in type design require submission all substantiating and descriptive data for inclusion in the type design and compliance statement, all of which is subject to FAA approval. 14 C.F.R. § 21.97.[9]

Minor type design changes may be approved "under a method acceptable to the FAA." 14 C.F.R. § 21.95. The FAA has clarified that implementation of minor type design changes still requires FAA approval. FAA Ltr. Br. at 5, 15. This is true in part because not only must the applicant choose a method acceptable to the FAA to effectuate minor type design changes, but "at a minimum," such minor changes also must be "recorded in the descriptive data, with the FAA and the applicant determining an acceptable process for approving the data supporting the type design changes." FAA DER Handbook at 12. The FAA's interpretation of its own

---

[8] The regulations do not define "appreciable." I note that Merriam-Webster defines the term as "capable of being perceived or measured."

[9] A manufacturer must obtain a new type certificate when it proposes any change in design, power, thrust, or weight that is so extensive that the FAA believes a substantially renewed investigation of compliance is required. 14 C.F.R. § 21.19. The same is true of type design changes that appreciably affect those factors. *Id.* § 21.93(a). Such changes may be implemented via the issuance of an amended or supplemental type certificate. *Id.* § 21.113(a). If a manufacturer does not hold the type certificate for a product but wishes to alter that product by introducing a major change in type design that does not require an application for a new type certificate under § 21.19, that person must apply to the appropriate aircraft certification office for a supplemental type certificate. *Id.* §§ 21.85; 21.113(b). Consequently, "[e]ven where a manufacturer identifies and reports a defect, it may not unilaterally make a major change to its preapproved design; instead, the FAA must either preapprove such a change or issue an airworthiness directive that provides legally enforceable instructions to make the product safe." *Sikkelee*, 822 F.3d at 704 n.21.

regulations thus makes clear that even though major type design changes often require more formalized methods of review, minor type design changes still must be approved before their implementation—albeit through more informal means as appropriate.

Relatedly, major and minor alterations are defined at 14 C.F.R. § 1.1. A major alteration is any alteration not listed in the aircraft, aircraft engine, or propeller specifications that (1) might appreciably affect weight, balance, structural strength, performance, powerplant operation, flight characteristics, or other qualities affecting airworthiness; or that (2) is not performed according to accepted practices or cannot be performed by elementary operations. *Id.* All other alterations are minor alterations. *Id.* Appendix A to 14 C.F.R. § 43 provides as follows:

> (a) Major Alterations—
>
> . . .
>
> (2) Powerplant major alterations. The following alterations of a powerplant when not listed in the engine specifications issued by the FAA, are powerplant major alterations:
>
> (i) Conversion of an aircraft engine from one approved model to another, involving any changes in compression ratio, propeller reduction gear, impeller gear ratios or the substitution of major engine parts which requires extensive rework and testing of the engine.

(ii) Changes to the engine by replacing aircraft engine structural parts with parts not supplied by the original manufacturer or parts not specifically approved by the Administrator.

(iii) Installation of an accessory which is not approved for the engine.

(iv) Removal of accessories that are listed as required equipment on the aircraft or engine specification.

(v) Installation of structural parts other than the type of parts approved for the installation.

(vi) Conversions of any sort for the purpose of using fuel of a rating or grade other than that listed in the engine specifications.

When a type certificate holder makes a major alteration or delegates implementation of a major alteration to an authorized party, the alteration must be completed "in accordance with technical data approved by the Administrator." *Id.* § 379(b). The same requirement applies to certificated repair stations who perform major alterations. *Id.* § 145.201(c)(2). "Approved data" used to make major alterations means data approved by the FAA or any person to whom the FAA has delegated its authority as to the alteration. FAA Order 8300.16 CHG 1, at 13 (hereinafter "FAA Data Approval Order").[10] "All data used to substantiate a major repair or alteration, regardless of the source, must be approved before being used." *Id.* at 13–14.

[10] https://www.faa.gov/documentLibrary/media/Order/8300_16_CHG_1.pdf.

In contrast, to perform minor alterations, the applicant or an authorized third-party performs the alteration using data "acceptable to the FAA" and must document it in maintenance records. *Id.* at 1. "Acceptable data" means data acceptable to the FAA. *Id.* at 13. Although acceptable data does not "necessarily require FAA review and acceptance prior to" use, the authorized party must be able to demonstrate that the data "meets all applicable regulatory requirements," and the FAA may challenge that data in a subsequent enforcement action. *Id.*

In that same Order describing the types of data necessary for major versus minor alterations, the FAA explained:

> The use of the term(s) major and minor are sometimes inappropriately applied or misunderstood. A major change in type design can be approved only by an ACO as an amended type certificate (TC) or supplemental type certificate (STC). A major alteration requires the use of FAA-approved technical data. Minor alterations only require data that is acceptable to the FAA. During an evaluation, an anticipated major alteration may be subsequently classified as a major change in type design, and thus would require application for an amended TC or STC.

Id. at 1.

The following flowchart supplied by the FAA on page 5 of its Data Approval Order assists in visualizing a manufacturer's regulatory burden when it seeks to implement an alteration:

Figure 1. Alterations Flowchart

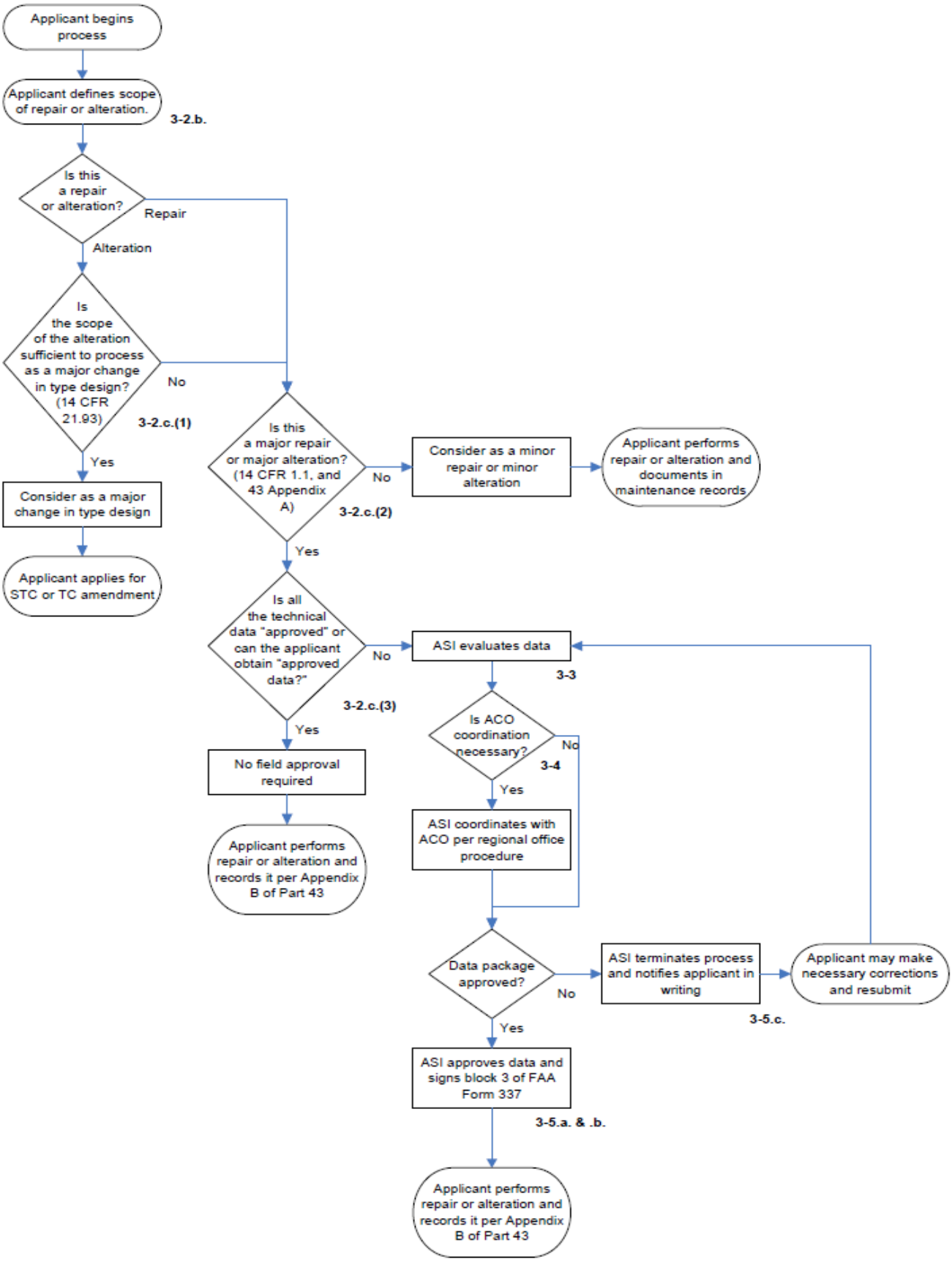

Table 1 below, categorizes the changes and regulatory burdens outlined by the regulations and the FAA's flowchart:

Table 1. Regulatory Burden by Modification Type

Proposed Modification		Regulatory Burden	Source
Major Alterations/Repairs	**Major Type Design Change**	must submit all substantiating and descriptive data for inclusion in the type design and compliance statement; subject to FAA approval	14 C.F.R. § 21.97
	Minor Type Design Change	may be approved under a method acceptable to the FAA; subject to FAA approval; requires the submission of "approved data"	14 C.F.R. § 21.95 FAA Ltr. Br. at 5, 15 14 C.F.R. § 121.379(b) 14 C.F.R. § 145.201(c)(2)
	No Type Design Change	requires the submission of "approved data"	14 C.F.R. § 121.379(b) 14 C.F.R. § 145.201(c)(2)
Minor Alterations/Repairs	**Major Type Design Change**	must submit all substantiating and descriptive data for inclusion in the type design and compliance statement; subject to FAA approval	14 C.F.R. § 21.97
	Minor Type Design Change	may be approved under a method acceptable to the FAA; subject to FAA approval	14 C.F.R. § 21.95 FAA Ltr. Br. at 5, 15
	No Type Design Change	applicant performs repairs and documents in maintenance records using data "acceptable to the FAA"	FAA Order 8300.16 at 1

To summarize, FAA approval is required for any major or minor changes to an article's type design, as well as for any major alteration. A major alteration is one that "might appreciably affect weight, balance, structural strength, performance, powerplant operation, flight characteristics, or other qualities affecting airworthiness,"

D. Designated Engineering Representatives (DERs) Pose No Issue As To Conflict Preemption Because At All Times, DERs Act Within The Scope Of Their FAA Delegation And Ensure That FAA Regulations Are Followed.

Recall that minor type design changes may be approved "under a method acceptable to the FAA." 14 C.F.R. § 21.95. One such method requires obtaining approval from an FAA designated engineering representative (DER). Plaintiff has suggested that changes implemented by way of DER approval would not be conflict preempted because some DERs may nominally be hired by private aircraft manufacturers. That argument is unavailing, however, because the FAA delegates to its DERs the power to approve modifications and otherwise act on the Administration's own behalf. Further, DER approval would likely have been insufficient to implement the proposed changes complained of here.

Section 44702(d) of the Federal Aviation Act (entitled "Delegation"), sets forth the authority for the FAA to empanel DERs to act as surrogates of the Administration, subject at all times to its regulations. That Section provides as follows:

(1) Subject to regulations, supervision, and review the Administrator may prescribe, the Administrator may delegate to a qualified private person, or to an employee under the supervision of that person, a matter related to—

(A) the examination, testing, and inspection necessary to issue a certificate under this chapter; and

(B) issuing the certificate.

The FAA exercises significant control over its DERs in the performance of their official duties. For instance, DERs are typically designated to serve one-year terms, capable of renewal for additional one-year periods at the FAA's discretion. *See Steenholdt v. FAA*, 314 F.3d 633, 635 (D.C. Cir. 2003) (Sentelle, J.) (citing 14 C.F.R. § 183.15). Moreover, a DER's designation may be rescinded should the FAA find that the DER has not properly performed his or her duties, is no longer necessary, or "for any reason the Administrator considers appropriate." 14 C.F.R. § 183.15; 49 U.S.C. § 44702(d)(2). In fact, the United States Court of Appeals for the District of Columbia Circuit has held that there are "no constraints" on the FAA's power to rescind a DER's official designation and that such a decision is not substantively reviewable under the Administrative Procedures Act. *Steenholdt*, 314 F.3d at 639.

Any decision by a DER may be appealed to the FAA. *Id.* § 44702(d)(3), and the FAA may, "on the Administrator's own initiative," reconsider a DER decision

at any time. If the FAA believes that the DER's decision was "unreasonable or unwarranted," it can modify or reverse it *in toto*. *Id.*

A corresponding regulation, 14 C.F.R. § 83.29(a), explicitly provides that a DER may approve structural engineering information and other structural considerations only when he or she determines that the revisions comply with all applicable FAA regulations. At all times, the DER acts "within limits prescribed by and under the general supervision of the Administrator." *Id.* As the FAA's official DER Handbook explains, "Specific roles, authorized areas, and responsibilities of a DER are established by an agreement between the [FAA's Air Craft Certification Office (ACO)] and the DER at the initial appointment of a DER, and, may be further limited for specific FAA projects." FAA DER Handbook at 6. Moreover, DERs can only "find compliance" on behalf of the FAA "in the delegated functions and authorized areas for which they were appointed." *Id.* at 11. The FAA also "retains authority and responsibility for establishing the certification basis" in such a way that "limits the data that a DER can approve." *Id.* at 12.

That same Handbook characterizes the delegatory relationship between the FAA and its DERs as follows:

> Title 49, United States Code, Section 44704 (49 U.S.C. § 44704) empowers the Administrator to issue type certificates (TC) for aircraft, aircraft engines, and propellers, and to specify regulations as

> applicable to the type certification function. Section 44702(d) authorizes the Administrator to delegate to a qualified private person, or to an employee under the supervision of that person, a matter related to the examination, testing, and inspection necessary to the issuance of such certificates. Delegations are limited in scope: all requirements, policy, direction, and interpretations remain with the Administrator.

Id. at 6. Further, any DER "must follow the same procedures that an FAA engineer must follow when performing compliance finding functions, such as those appearing in Order 8110.4, Type Certification, Order 8110.42, Parts Manufacturer Approval Procedures, and Order 8110.54, Instructions for Continued Airworthiness Responsibilities, Requirements, and Contents." *Id.* The DER Manual explains that FAA pre-authorization is required "before exercising authority on any certification project," and in all cases, the DER "must follow FAA policy in determining compliance with pertinent regulations." *Id.* at 21.

According to the DER Handbook, major changes require specific DER authorization. FAA DER Handbook at 24. However, the FAA "may approve minor changes in type design under a method acceptable to the Administrator, per 14 CFR § 21.95." *Id.* This method may include approval by a DER." *Id.* Thus, even where a manufacturer believes that a proposed change is a minor one, it cannot take independent action to make that change—its implementation instead depends upon the DER's approval and still remains subject to the FAA's broad oversight at

several junctures. This is consistent with the FAA's interpretation of its own regulations. FAA Ltr. Br. at 5, 15.

Although the applicant may suggest to the DER whether it believes a type design change is major or minor, "the FAA retains final approval of that decision, and it cannot be delegated." *Id.* at 12. To that end, the DER is not authorized to interpret FAA regulations. *Id.* Instead it "must be guided by" the FAA's "existing policies, procedures, specifications, processes, and standards." *Id.* In addition, not only must the applicant choose a method acceptable to the FAA to effectuate minor changes, but "at a minimum," minor changes also must be "recorded in the descriptive data, with the FAA and the applicant determining an acceptable process for approving the data supporting the type design changes." *Id.*

The United States Court of Appeals for the Fifth Circuit has described DERs as "independent contractors" of the FAA, who although hired by the private aircraft industry to inspect private airplanes, may only approve modifications within their delegated authority by first ensuring that the changes would comply with the regulations. *Ligon v. LaHood*, 614 F.3d 150, 152 (5th Cir. 2010). "Stated differently, the DER process enables the FAA to appoint qualified private individuals to perform examinations, tests, and inspections required to determine compliance with FAA airworthiness regulations," ensuring "that private industry clients who hire the DER are in compliance with FAA regulations for

airworthiness standards." *Jones v. LaHood*, 667 F. Supp. 2d 714, 715 (N.D. Tex. 2009), *aff'd sub nom. Jones v. United States*, 625 F.3d 827 (5th Cir. 2010). *See also Leica Geosystems, Inc. v. L.W.S. Leasing, Inc.*, 872 F. Supp. 2d 1191, 1195 (D. Colo. 2012) (explaining that a DER "works as a special liaison" between the FAA and private repair stations "to ensure that the modification is in compliance with FAA regulations").

The Supreme Court has cast the surrogacy relationship between the FAA and its DER designees in the following light:

> With fewer than 400 engineers, the FAA obviously cannot complete this elaborate compliance review process alone. Accordingly, 49 U.S.C. § 1355 authorizes the Secretary to delegate certain inspection and certification responsibilities to properly qualified private persons. By regulation, the Secretary has provided for the appointment of private individuals to serve as designated engineering representatives to assist in the FAA certification process. 14 CFR § 183.29 (1984). These representatives are typically employees of aircraft manufacturers who possess detailed knowledge of an aircraft's design based upon their day-to-day involvement in its development. The representatives act as surrogates of the FAA in examining, inspecting, and testing aircraft for purposes of certification. 14 CFR § 183.1 (1984). In determining whether an aircraft complies with FAA regulations, they are guided by the same requirements, instructions, and procedures as FAA employees. FAA employees may briefly review the reports and other data submitted by representatives before certificating a subject aircraft.

United States v. S.A. Empresa de Viacao Aerea Rio Grandense (Varig Airlines), 467 U.S. 797, 807 (1984) (internal citations omitted).

As such, I note that a DER serves as a functional extension of the FAA, working to make the Administration's approval process more efficient—not to lower the applicable regulatory standards. As the FAA has explained, the DER's purpose is to "expedit[e] accomplishment of required demonstrations of compliance with applicable airworthiness standards" and to "reduce or eliminate delays in obtaining required certifications." *Designated Airworthiness Representatives*, 48 Fed. Reg. 16176.

Neither is it significant that DERs may at times be nominally employed third-party aviation entities when they perform the regulatory role that the FAA has delegated them. "The FAA has stated that 'when performing a delegated function, designees are legally distinct from and act independent of the organizations that employ them.'" *Swanstrom v. Teledyne Cont'l Motors, Inc.*, 531 F. Supp. 2d 1325, 1333 (S.D. Ala. 2008) (quoting *Establishment of Organization Designation Authorization Program*, 70 Fed. Reg. 59932, 59933 (Oct. 13, 2005)). In fact, the district court in *Swanstrom* described DERS as being "subject to administrative regulations by the FAA" and perhaps capable of being classified as "persons acting under a federal officer" for the purposes of federal removal jurisdiction. 531 F. Supp. 2d at 1332. Moreover, a failure by a DER to fulfill his obligations for the continued maintenance of FAA certification is "a failure as a DER, not as an individual airman." *Duchek v. Nat'l Transp. Safety Bd.*, 364 F.3d

311, 316 (D.C. Cir. 2004). *See also Marcy v. FAA*, 936 F.2d 583 (10th Cir. 1991) (upholding substantive reasonableness of FAA's decision not to renew DER's commission when DER "exceeded the bounds of his authority in violation of agency regulations" by "continu[ing] to insist upon his own interpretation of the appropriate regulations").

Further, the law is clear that courts must prioritize functional realities over cursory labels when analyzing employment or delegation relationships. In determining upon whose behalf an individual performs his work, "economic reality rather than technical concepts is to be the test." *In re Enterprise Rent-A-Car Wage & Hour Employment Practices Litig.*, 683 F.3d 462, 467 (3d Cir. 2012) (Garth, J.). Thus, courts in the Third Circuit's vicinage must examine "the totality of the circumstances to determine the economic realities of the relationship" between two entities. *Jochim v. Jean Madeline Education Center of Cosmetology, Inc.*, 98 F. Supp. 3d 750, 757 (E.D. Pa. 2015).

These authorities thus point to one conclusion: DER approval is not independently undertaken by a private manufacturer unconstrained by FAA regulations. Rather, it is a type of delegated approval that will only be granted when compliance with the pertinent regulations is adequately shown, and the DER has acted within the scope of the Administration's delegation.

E. Parts Manufacturer Approval (PMA) Holders Who Submit Their Own Tests And Computations To The FAA Are Not Legally Bound By The Type Certificate Holder's Design Decisions. Instead, Market Forces Incentivize Them To Produce Replacement Parts Sufficiently Close To Those Approved In The Type Certificate.

In general, aircraft replacement components may not be produced except under the original type certificate or a production agreement, such as a Parts Manufacturer Approval (PMA). 14 C.F.R. §§ 21.8; 21.9(a)–(b). A type certificate may also be transferred or made available to third parties by way of a licensing agreement. 21 C.F.R. § 21.47(a). In that case, the type certificate holder must provide to the other party to the licensing agreement a formal written agreement acceptable to the FAA. *Id.* § 21.55. Lycoming had no licensing agreement with its co-defendants regarding the subject carburetor. Instead, the co-defendants produced that part independently according to a separate agreement that they had reached with the FAA to which Lycoming was not a party.

Make no mistake about it: type certificate holders and PMA holders are not entities who sit at different stages of a unified supply chain. To the extent that earlier decisions of this Court have imputed as much, those decisions gave analysis of this relationship much too short shrift. To the contrary, type certificate holders and PMA holders are competitors, as are most original equipment manufacturers (OEMs) relative to their aftermarket counterparts. The hallmark of any such economic relationship is the trade-off between the quality of imitations and price

savings. As it were, OEMs like type certificate holders were quick to disparage the quality of PMA parts when they were first authorized to sell aftermarket products. In fact, an early FAA Special Airworthiness Information Bulletin rebuked one OEM's attempt to analogize PMA holders to second-rate Elvis impersonators. *See* FAA SAIB: NE-08-40.[11] Tellingly, the FAA wrote the following in that very same bulletin: "The FAA understands that the [type certificate] holder has no knowledge or data about the PMA and STC parts installed in the product and, therefore, can only assess the airworthiness and systems effects of their parts installed in the product."

This strict dichotomy between OEMs like type certificate holders and aftermarket part producers like PMA holders is further illustrated by the regulations. Specifically, the first regulation in the subpart on PMAs makes clear that the section governs only the procedures for obtaining a PMA and the duties of PMA holders—it does not apply to the type certification process discussed above. 14. C.F.R. § 21.301.

Third-party manufacturers seeking PMA approval typically must obtain it by satisfying one of three methods: (1) identicality with a licensing agreement; (2) identicality without a licensing agreement; or (3) tests and computations. FAA Order 8120.22A, *Production Approval Process*, at 4-7–4-8 (hereinafter "PMA

[11] http://rgl.faa.gov/Regulatory_and_Guidance_Library/rgSAIB.nsf/dc7bd4f27e5f107486257221005f069d/af4cd7d303d7ba628625749f006afbc7/$FILE/NE-08-40.pdf.

Order").[12] The parties do not dispute that the PMA relevant to the pending motions was obtained by the tests and computations method. This is a particularly compelling fact when considering the extent of Lycoming's liability for subsequent modifications, as the tests and computations method is the type of approval that relies least upon demonstrating an identity of structure between the type certificate holder's article and the article for which the PMA is sought.

In the context of the PMA process, "identicality" is a strict notion. It requires that the PMA applicant "show[ ] that the design of the article is identical to the design of an article that is covered under a type certificate." 14 C.F.R. § 21.303(4). An applicant seeking approval by way of identicality must certify that the proposed design "is identical in all respects" to the already-approved design. PMA Order at 4-8. That certification must be supported by data. *Id.* Further, identicality with an existing PMA is insufficient to obtain approval for a subsequent PMA. *Id.* The previously approved design from which identicality is measured must have received type certification or an equivalent approval. *Id.*

Absent such a showing, the applicant must submit test reports and computations showing that the design of the article meets the applicable airworthiness requirements. *Id.* When a PMA applicant selects the tests and computations route, it must submit a "data package" indicating that "all design,

[12] https://www.faa.gov/documentLibrary/media/Order/FAA_Order_8120_22A.pdf.

materials, processes, test specifications, system compatibility, and interchangeability are supported by an appropriate test and substantiation plan for FAA review and approval." *Id.* A tests and computations application must contain: (1) a compliance checklist as to the regulatory requirements; (2) test reports and computations; (3) a safety assessment; and (4) a continued operation safety plan. *See* FAA Advisory Circular 21.303-4, at 5 (hereinafter "PMA Advisory Circular").[13]

The test reports and computations must "show that an article's design meets the applicable airworthiness requirements of its respective product." *Id.* at 7. Although the scope and rigor of each test may vary, the FAA requires that they at least include: (1) a safety assessment that characterizes the nature of the article and its effect on safety; (2) computations that show regulatory compliance or substantiate the comparative analysis; and (3) test results that show direct regulatory compliance or verify the comparative analyses. *Id.* At all times, the focus is on the proposed articles "purpose, physical characteristics, interfaces with its product, and hot its failure modes impact safety." *Id.*[14]

---

[13] https://www.faa.gov/documentLibrary/media/Advisory_Circular/AC_21.303-4.pdf.

[14] In an eleventh-hour argument, Plaintiff contended in supplemental briefing that the PMA holder in this case may have been exempted from obtaining FAA approval because it qualified as an FAA-certified "repair station." This argument is unavailing for several reasons. First, the facts reveal that the subject carburetor overhaul discussed more fully herein was accomplished by virtue of the manufacturer's status as a PMA holder, not in its capacity as a repair station as Plaintiff's *post hoc* characterization might suggest. Second, no evidence in the record suggests that the carburetor overhaul would have qualified as a

All of these tests are completed and summarized by the PMA applicant, not by the type certificate holder. *Id.* Indeed, the type certificate holder has no place in the PMA process. As counsel for Plaintiff, Tejinder Singh, Esquire, explained at oral argument, the relationship between a PMA article and a type-certificated one is primarily that of imitation motivated by economic incentives. As Mr. Singh described, "[T]he reason that [the PMA holder] designs things the way it does is not so much that the FAA . . . created a design for it to follow. It is that it wants to produce parts for use on [the type certificate holder's] engines. Right. That's its economic motivation." Tr. of May 19, 2017 Oral Arg., ECF No. 562, at 138:22–25 (hereinafter "May 2017 Tr."). "The reason that manufacturers like [the PMA holder] get in the position they're in is because they just to sell parts for these engines," he continued. "[T]hey follow the OEM design as closely as possible." *Id.* at 139:09–12.

In response to my follow-up question "So you are saying out of their own free will that they would follow the type certificate design? Not a mandate from someone?" Mr. Singh answered, "Well, it's not their own—so the reason they seek

---

"repair" as the FAA regulations define that term, rather than an as "alteration." To the contrary, it appears that the overhaul process began with the subject engine in an airworthy state. Third, FAA repair stations, similar to DERs, are bound by the scope of their FAA designation, and Plaintiff has presented no evidence that the FAA would have permitted this particular aftermarket manufacturer to institute such a change in engine design that would have allegedly had a significant impact on reliability and airworthiness under the guise of a "repair." Finally, the record is silent as to when precisely this PMA holder became an FAA-certified repair station and whether that designation was active at the time of the 2004 overhaul.

the approval they seek, yes, is to conform to the type certificate and design. Yeah, that's a decision they make." *Id.* Mr. Singh would go on to explain:

> [T]hat's not how the PMA business works. If you want to make parts to put on [type-certificated] engines, you mimic the design as closely as possible. Right?
>
> You may not want to have to source your parts from [the type certificate holder]. You may want to get them yourself cheaper. You may want to sell them to whoever [*sic*] you want to sell them to. All of that, as a matter of economics, makes perfect sense.

Id. at 101:19–25.

"Only the FAA or an [Organization Designation Authorization (ODA)] can issue PMA. DERs do not issue PMAs, but support the FAA approval process with findings within their limitations." In addition, "a DER may only recommend approval within the scope of their authority for critical parts." *Id.* FAA Order 8110.42D, *Parts Manufacturer Approval Procedures*, at 3-2 (hereinafter "FAA PMA Procedures").[15] A "critical part" is typically one "for which a replacement time, inspection interval, or related procedure is specified in the Airworthiness Limitations section of a manufacturer's maintenance manual or Instructions for Continued Airworthiness." 14 C.F.R. § 45.15(c).

Further, Appendix A to the FAA's DER Handbook (entitled "Limitations on DER Functions") specifically states that "The following items are approved or issued only by the FAA: . . . (d) TCs, PMAs, ..." A provision in the Handbook

[15] https://www.faa.gov/documentLibrary/media/Order/8110.42D.pdf.

directly reference the list of functions reserved to the FAA states: "[W]e generally reserve for ourselves the approval of items listed in appendix A, paragraph 2. If we do delegate, we should do it carefully and consistently as follows: . . . (4) PMA Design Approvals. A DER may make findings of identicality or findings of compliance to the airworthiness requirements by test and computation that contribute to PMA design approvals, within the scope of delegation from the project ACO. The DER must be specifically authorized to make a finding of identicality by the managing ACO."

The process for implementing design changes to a PMA tracks those for type certificates and type design changes. In particular, 14 C.F.R. § 21.319(a) defines a "minor change" to a PMA as "one that has no appreciable effect" on its basis for approval. All other design changes are "major changes." *Id.* For major changes, the PMA holder "must obtain FAA approval" before including the change in a renewed design. *Id.* 21.319(b). Minor changes to the basic design of a PMA "may be approved using a method acceptable to the FAA." *Id.* Recall that "a method acceptable to the FAA" is the same language that the FAA has previously interpreted in this case to require FAA approval before independent action can be taken. FAA Ltr. Br. at 5, 15. The scope of a DER's authority to implement post-PMA major repairs or alterations is limited in the same way as his authority to make those repairs and alterations to type certificates. FAA DER Handbook at 27.

F. The Subject Engine Leaves Lycoming's Hands In 1969, Only To Be Placed In Storage And Lost To Time.

With that regulatory background in mind, I now turn to the operative facts of this case. The engine at issue, Lycoming model O-320-D2C, serial number L-6540-39A, was manufactured on August 13, 1969 by Lycoming Engines in Williamsport, Lycoming County, Pennsylvania. Expert Report of W. Jeffrey Edwards, ECF No. 384-1, at 57 (hereinafter "Edwards Report"). The engine was FAA certified under Lycoming's E-274 Type Certificate on May 2, 1966.

On September 4, 1969, shortly after Neil Armstrong walked on the moon, Lycoming shipped the engine at the heart of this dispute to Beagle Aircraft, Ltd., a British aircraft manufacturer. Declaration of James R. Stabley, ECF No. 221–1, ¶ 3 (hereinafter "Stabley Decl."). Beagle apparently planned to install the engine in a small, single-engine model known as the Beagle Pup. Edwards Report at 57–58; May Tr. at 45:18–21. However, for reasons unknown to the parties and likely lost to history, the engine was diverted to permanent storage before it ever was installed on any aircraft whatsoever. Edwards Report at 57–58; Stabley Report at 4. According to Mr. Edwards's report, Beagle was dissolved late in 1969 and its assets were liquidated. Edwards Report at 57.

Lycoming has no record of the engine ever being returned to its factory for service after the original September 4, 1969 shipment. Stabley Decl. ¶ 6. In fact, the "Received for Repairs" section of Lycoming's internal engine record form for

the engine is entirely blank for that time period. ECF No. 221-1 Ex. A. Moreover, the parties suspect that the individual who signed certain of the earliest available records has either since died or has become *non compos mentis*. May 2017 Tr. at 10:14–19. Lycoming maintained no further records of the subject engine until after the accident was reported—it did not know where the engine was or even that it still existed.

At the time Lycoming manufactured and shipped the engine to Beagle in 1969, the engine was equipped with a Marvel-Schebler model MA-4SPA, setting 10-3678-32, carburetor with serial number A-25-15850. Stabley Decl. ¶ 4. The carburetor is critical to ensuring that the engine itself generates sufficient power for the aircraft, as the carburetor is responsible for delivering the appropriate mix of air and fuel for combustion in the engine. The specific workings of this carburetor are explained more fully herein.

G. In 1998, After 29 Year In Storage, The Subject Engine Is Removed, Maintenance Is Performed, And The Engine Is Installed On An Aircraft For The First Time, Which Aircraft Did Not Even Exist In 1969.

On September 1, 1998, the subject engine was removed from storage. Edwards Report at 59. One additional expert report submitted in this case points out that during this period of long-term storage, the engine at least twice would have missed its scheduled 12-year overhaul date and therefore would not be in compliance with Lycoming's service instructions. Expert Report of James R.

Stabley, ECF No. 381-1, at 7 (hereinafter "Stabley Report"). The following maintenance was performed in 1998 as recorded in the engine's logbook:

(a) "Removed 4 cylinders and prop flange crankshaft plug, inspection found new condition";

(b) "Replaced cylinders using new Lycoming original kits";

(c) "Replaced Prop Flange Bushings with new";

(d) "Replaced Magnetos with Slick mag and harness kit";

(e) "Install serviceable Alt Motorcraft 00 FF 103000 OH 1-23-95";

(f) "Install new OH carb 10-5135 SN CK-611739"; and

(g) "Installed new Lycoming Alt drive belt, new Champion REM40E plugs."

Edwards Report at 59.

By October 16, 1998, the engine was installed on a 1976 Cessna 172N bearing registration N73747 after a previous engine was removed from that same plane. *Id.* All of the maintenance work and reinstallation was performed by a third-party and not by Lycoming. *See id.* at 58–59. In fact, at that time, the engine was not even type certificated for installation in the 1976 Cessna 172N, presumably because the Cessna 172N did not exist at the time Lycoming obtained the original type certificate for its engine. *Id. See also* Tr. of Nov. 13, 2013 Fed. R. Evid. 104 Hr'g, ECF No. 459, at 229:19–21 (hereinafter "Nov. 2013 Tr."); May 2017 Tr. at 22:13–18.

An exemplar of a Cessna 172N taken from Mr. Edwards's Report is depicted below:

Figure 2. Cessna 172N Exemplar

All told, after having been left in storage for nearly three decades, the engine was removed, maintenance was performed, and it was installed an aircraft for which it was not originally certified and for which supplemental approval was required. The owner of the Cessna at that time was listed as LaGrange Machine Shop, Inc., whose business address was 1706 Shorewood Drive, LaGrange, GA 30240. *See* ECF No. 234-1 at 6–7. Based on that same hoary 1998 maintenance record, the individual who performed the maintenance on behalf of LaGrange

appears to be James O. Perry. *Id.* Nothing in the record indicates the LaGrange or Mr. Perry bore any relationship to Lycoming whatsoever. Until this litigation commenced, Lycoming likely never knew either existed.

Because the engine was not type certificated for installation on a Cessna 172N, Mr. Perry was required to submit an FAA Major Alteration Form 337, dated December 1, 1998. *See* ECF No. 234-1 at 6–7. That alteration was field approved by Peter J. Van Leeuwuen, acting within the scope of his FAA inspection authorization. *See id*. at 6.[16] On the approval form, Mr. Van Leeuwen's address is the same as LaGrange's above.

Mr. Edwards's report also suggests that the October 1998 installation did not comply with Lycoming Service Instruction 1009AM regarding overhaul periodicity and failed to address several outstanding airworthiness directives. Edwards Report at 59. This is "consistent with substandard maintenance," Mr. Edwards wrote, as the aircraft was operated while not airworthy between October 1998 and December 1998, and again between December 1998 and August 2004. *Id.*

According to Mr. Edwards, the reason that the engine required such immediate repair in December 1998 after its October 1998 installation was because

[16] "Field approval" is a method by which the FAA grants one-time approval for technical data used to accomplish a major repair or a major alteration on a single aircraft. FAA Data Approval Order at 3.

it sustained a broken lifter body component after being placed into service for just 12.3 hours. *Id.* at 60. According to his report, "The engine had significant problems due to corrosion from its long-term storage, necessitating a complete disassembly and inspection." *Id.*

H. The Subject Aircraft Is Struck By Lightning, After Which Time And Without Lycoming's Approval Or Knowledge, Kelly Aerospace Overhauls The Subject Carburetor And Replaces It With An Aftermarket Conglomerate, Pursuant To An Independent, Third-Party PMA From The FAA.

In July 2004, the engine was removed after the aircraft was struck by lightning. Stabley Report at 4; Edwards Report at 61. The record is unclear as to whether the strike occurred while the aircraft was grounded or in flight and whether the aircraft was activated at the time of the strike. Nevertheless, from December 1998 until the July 2004 lightning strike, the aircraft flew for 1,262.6 problem-free hours. Stabley Report at 4; Edwards Report at 61.

At that time and while the engine was removed for inspection, Triad Aviation, Inc., overhauled the entire engine. Stabley Report at 4; Edwards Report at 62. During the overhaul, Triad removed the carburetor itself from the engine and sent it to Kelly Aerospace Power Systems to be overhauled separately. Kelly's principal place of business was Alabama. Second Am. Compl., ECF No. 205, at ¶ 4.

Under 14 C.F.R. § 43.2, "overhaul" is a regulatory term of art, which describes the process by which a component, using methods, techniques, and practices acceptable to the FAA, has been disassembled, cleaned, inspected, repaired as necessary, and reassembled. Overhaul methods must be conducted in accordance with FAA-approved standards and technical data, and adequately documented. *Id.* Component overhauls, for instance, follow a sort of Humpty-Dumpty process, whereby the components are disassembled and all of the internal parts are separated, repaired, or replaced, at which point the overhauling entity endeavors to put all of the pieces back together again. *See* Defendant Kelly's Revised Responses to Lycoming's Request for Admission, ECF No. 221-2 (hereinafter "Kelly Admissions").

As discussed earlier, the carburetor is the engine component that meters the air-fuel mixture supplied to the engine so that the combustion process functions efficiently and powers the engine accordingly. During the November 2013 Rule 104 Hearing before this Court, Plaintiff's expert, Donald E. Sommer, explained the significance of the carburetor to an aircraft engine, as well as how a carburetor like the one at issue typically functions. Sitting upright, the bottom of the carburetor connects to the air box from which it receives air, and the top of the carburetor connects to the engine into which it supplies metered air. Nov. 2013 Tr. at 22:20–23:04.

The bottom of the carburetor is called the float bowl because it is a bowl-shaped compartment that contains the fuel. *Id.* at 23:05–08. The top half of the carburetor is known as the throttle body because it contains the throttle, the device that meters the flow of air and fuel to the engine. *Id.* at 23:08–11. The two parts parts—the float bowl and the throttle body—connected by four hex head screws and bolts. *Id.* at 23:11–13. Two schematics from Mr. Sommer's report are depicted below for reference:

Figure 3. MA-4SPA Carburetor Operational Schematic

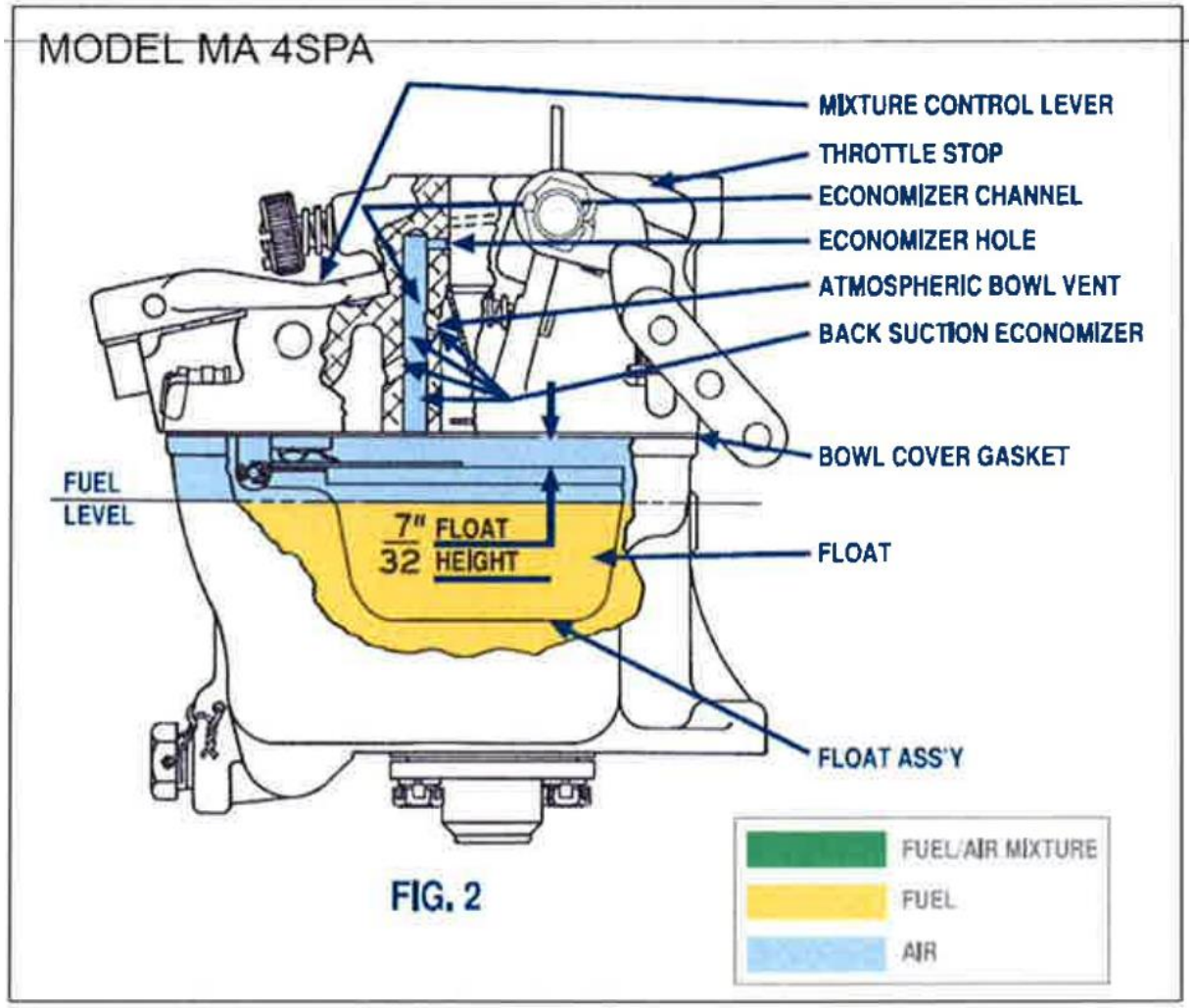

Figure 4. MA-4SPA Carburetor Throttle Body Screws Schematic

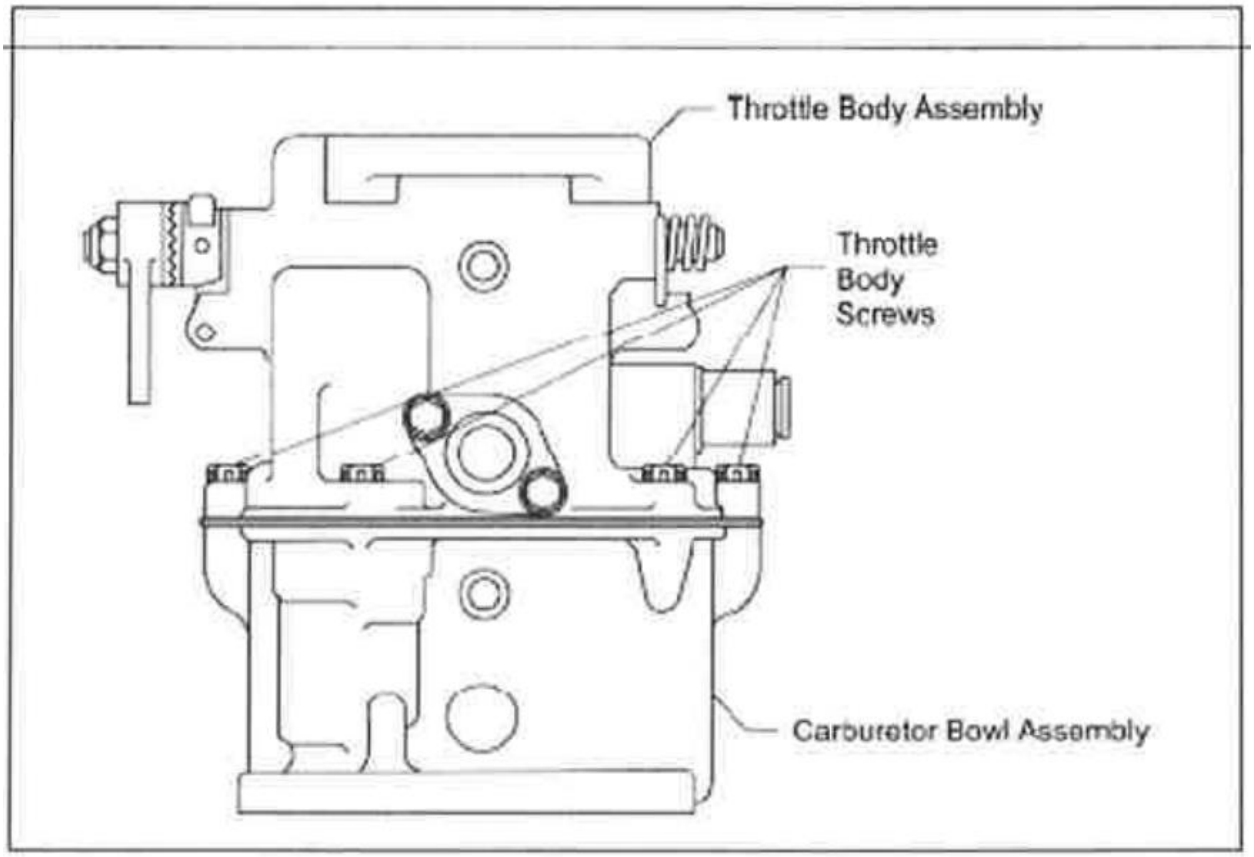

According to Mr. Sommer, it is very important that the carburetor regulate how much air passes through it, because the metered fuel should emerge as a fine mist or spray. *Id.* at 24:17–20. If the fuel is emitted in globules or large droplets, however, the engine will not be able to burn it efficiently, and the aircraft's horsepower will be minimal. *Id.* at 24:20–25. Eventually, if the fuel content in the mixture is continuously concentrated rather than finely dispersed, the engine may even cease to run. *Id.* at 24:25–25:01.

In between the float bowl and the throttle body is a gasket that permits an airtight seal. *Id.* at 28:02–04. That gasket is held in place by four bolts and lock

washers that connect the throttle body to the float bowl. *Id.* at 28:05–06. The bolt has a screw slot, but it also features a hexed head, so that it can be installed either by a screwdriver or a wrench. *Id.* at 29:16–19. When a mechanic fastens the system together after a repair or overhaul, he or she would take the bolt, drop it into the lock washer holes, drop the bolts into the throttle body holes, put the throttle body on top of the float bowl, and screw the bolts into the threaded holes featured on the float bowl. *Id.* at 29:19–23. A corresponding photo from Mr. Edward's report depicts not only this portion of the MA-4SPA carburetor fastening process, but also the entire carburetor reconstruction:

Figure 5. MA-4SPA Carburetor Bolt Fastening Schematic

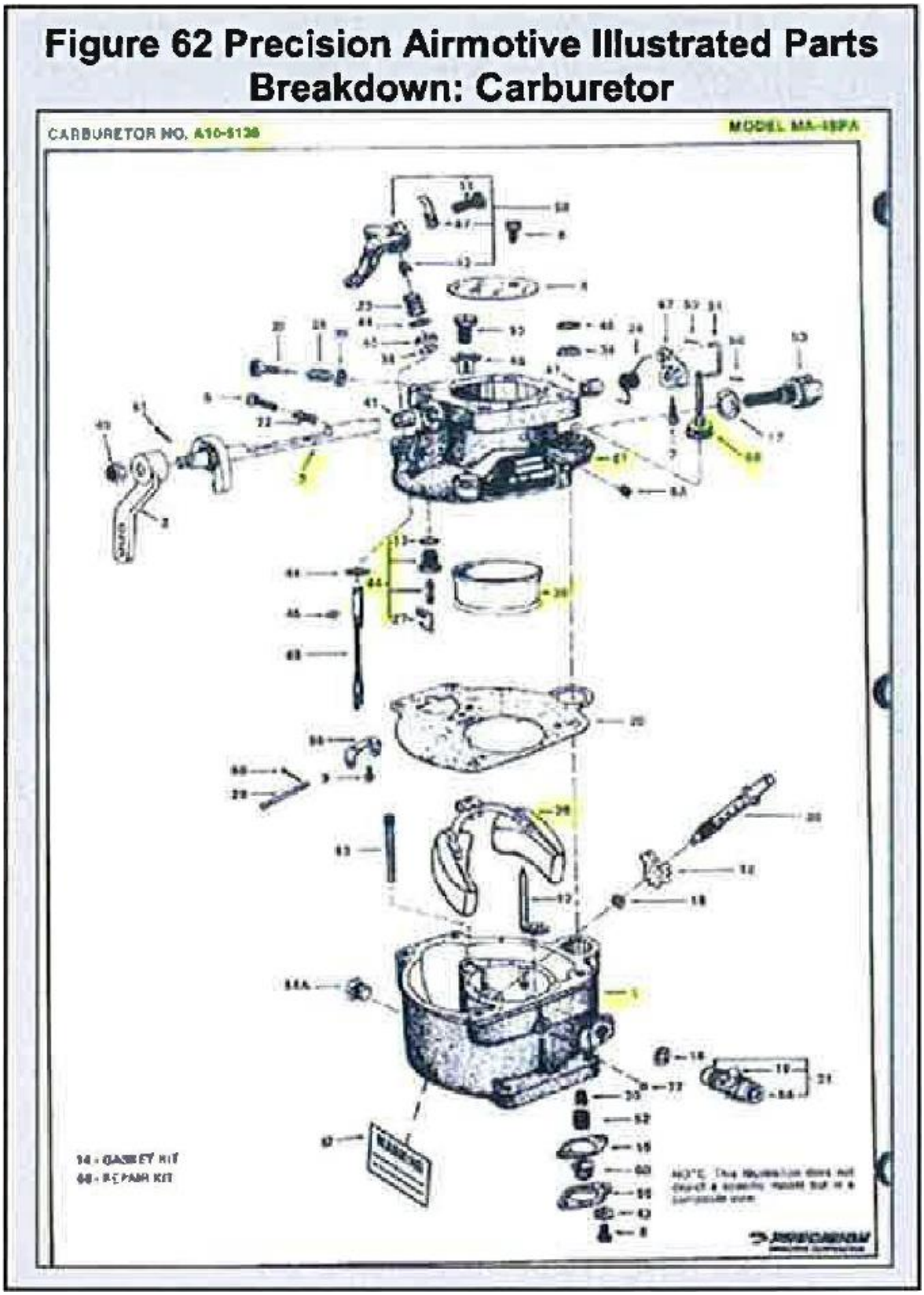

With those visuals in mind, I now turn the precise facts of Kelly's 2004 overhaul of the subject carburetor. This is an important juncture in the engine's history, because although Plaintiff alleges that faulty carburetor screws caused the plain to lose power, the original MA-4SPA carburetor shipped by Lycoming with the original in 1969 was entirely gutted and replaced by Kelly during the overhaul. Somewhat remarkably, that fact is undisputed (and has been) through the pendency of this litigation. Indeed, Judge Jones, in a 2012 decision, memorialized those admissions as follows:

- "Plaintiff admits that the carburetor that was installed on the Cessna 172N was not the same carburetor that Lycoming shipped with the engine in 1969."
- "Plaintiff does not dispute, that the Kelly Defendants manufactured, replaced, and shipped the carburetor and its component parts."
- "Plaintiff admits that Lycoming's hands did not physically touch the carburetor."

ECF No. 299 at 8, 13, 15.

It is also admitted that Triad shipped the carburetor from North Carolina to Kelly for overhaul. Kelly Admissions ¶ 5. Kelly overhauled the carburetor on or about August 3–5, 2004 using a throttle body and float bowl from Kelly's own core parts bank. *Id.* ¶ 6. Kelly also manufactured the pump plunger, the valve and

seat assembly, the single piece venturi, and the throttle shaft, and used them to rebuild the carburetor during the overhaul. *Id.* ¶ 13–14.

An important facet of Kelly's overhaul of the subject was its selection of parts comprising the float bowl (bottom) and throttle body (top) of the carburetor. In particular, Kelly admitted that the physical manufacturing of the float bowl was performed by an outside vendor. *Id.* ¶ 16. Subsequent discovery has suggested that one half of the carburetor was likely manufactured by Marvel-Schebler in the 1960s because it was painted black, a practice the company stopped in that decade. May Tr. at 16:09–14. *See also* Stabley Report at 8. Another Defendant produced a record showing that the other half of the carburetor was manufactured in the 1970s. May Tr. at 16:14–15. Then, Kelly used its own aftermarket parts to fasten the two halves together. *Id.* at 16–20. In essence, Kelly created what counsel for Defendant, Catherine Slavin, Esquire, termed "a Frankenstein's monster"—literally melding together two distinct aftermarket carburetor halves produced in subsequent decades before adjoining those two halves with a third set of parts from a different aftermarket parts manufacturer. May Tr. at 16:09–20; 84:15–16.

Lycoming was not involved with 2004 overhaul in any way. It had no practical control over how Kelly overhauled the engine, and at no time did it instruct Kelly to use the parts that Kelly ultimately selected. In fact, we now know that Lycoming was not even aware that one of its engines had been placed on this

specific Cessna aircraft, never mind having had its carburetor overhauled in such a hodgepodge manner, until after the accident occurred in the summer of 2005.

To the contrary, when Kelly overhauled the plane, it acted pursuant to a separate PMA that it had obtained from the FAA. Lycoming was not party to that PMA, and Kelly at no time had a licensing agreement with Lycoming. Instead, Kelly obtained its PMA by way of the tests and computations avenue, having run its own tests on its parts and having submitted its own proposed designs and its own supporting data. To the extent that Kelly's parts were similar to Lycoming's, it was because Kelly consciously decided as much, not because its hand was forced by Lycoming.

As Mr. Sommer, Plaintiff's own expert, testified at the Rule 104 hearing, Kelly obtained its PMA "by going to the FAA and showing that their [*sic*] parts were similar in fit, form, and function and preparing an application and receiving approval." Nov. 2013 Tr. at 127:11–15. Mr. Sommer explained that Lycoming itself could not have even sold the engine with aftermarket Kelly parts, as it stood in its post-overhaul form. *Id.* at 127:20–24. "Kelly is not included in the Cessna 172 Lycoming type certification. So it can't come out of the factory." *Id.* at 127:23–24. In fact, Kelly did not obtain FAA approval to implement the subject PMA parts until the 1980s, well after Lycoming had released the engine into the stream of commerce. Nov. 2013 Tr. at 128:03–09. Thus, to the extent that Kelly's

independent designs and configurations resembled Lycoming's, it was because, as Mr. Singh explained at oral argument, Kelly freely chose to model its parts after the type certificate holder's, not because Lycoming controlled or coerced Kelly to do as much. To the contrary, it appears highly disadvantageous from a type certificate holder's point of view for comparable aftermarket replacement parts to be available at all, let alone at lower price points.

During the July 2004 engine overhaul, Plaintiff alleges that the Defendants complied with a service bulletin previously issued by Lycoming, known as Service Bulletin 366. That bulletin was broadly issued on September 14, 1973 to any and all parts manufacturers or end users who might be responsible for securing maintenance on "All AVCO Lycoming engines equipped with Marvel-Schebler carburetors." ECF No. 234-10 at 2. The Bulletin consists of three short paragraphs, together approximately one-half page in length.

The Bulletin is written generally and provides no direct guidance for the particular parts or methods eventually employed 31 years later by Kelly. *See id.* Instead it merely notifies recipients that if leaking is evident or the screws are loose, the carburetor may be disassembled so that the gasket may be replaced and the screws retightened. *Id.* Further, it makes no mention of the types of components or the designs that should be used when an aftermarket parts manufacturer seeks a PMA pertaining to the carburetor. *See id.*

I. The Carburetor Is Reinstalled In The Engine, The Engine Is Reinstalled In The Aircraft, And After Just 400 Hours Of Flight Time, The Aircraft Crashes With An Inexperienced Pilot In Command.

The plane was placed back into service on September 9, 2004, and the plane was flown for just under 400 additional hours when, on Sunday, July 10, 2005, it crashed near the rural Transylvania County Airport in Brevard, North Carolina. Edwards Report at 5, 65–66. Just after take-off, the plane collided with the ground and caught fire. *Id.* at 5. Prior to the August 2004 overhaul, the plane had flown for at least 1,200 hours. *Id.* at 66. The last annual inspection occurred on February 4, 2005, approximately 200 hours after the overhaul. *Id.* The last known maintenance occurred on June 20, 2005, at which time work was performed on the carburetor within a few inches of the subject carburetor body-to-bowl screws. *Id.*

The plane was registered to a private owner, Randall F. Winchester of Greenville Aviation, a full-service pilot training center. *Id.* at 56. At the time of the crash, it was being flown by pilot David Sikkelee, Jr., with his brother Craig Sikkelee riding along as a passenger. *Id.* at 5–7. The pair was purportedly on a business trip. *Id.* at 1. David Sikkelee sustained fatal injuries in the crash, while Craig Sikkelee received serious injuries but survived. *Id.*

David Sikkelee's pilot history was reconstructed from existing records, including FAA records on file at the FAA record center in Oklahoma City, Oklahoma, as his pilot logbook was damaged by the post-crash fire. *Id.* 7– 8. In

2004, Mr. Sikkelee received an FAA private pilot single-engine land certificate, the lowest pilot certificate that allows one to act as a pilot in command carrying passengers in this class of aircraft. *Id.* at 8. According to the certification records, Mr. Sikkelee had approximately 50 total hours of certifying flight time and 14 hours as a pilot in command, none of which were accumulated in a Cessna 172N. *Id.* The certifying instructor apparently only spent a total of 3.9 hours with Mr. Sikkelee. *Id.* Further, although Mr. Sikkelee reported 68 total hours of flight time, with 4 hours in the six months preceding the accident, Mr. Edwards believes that an analysis of Mr. Sikkelee's rental and FAA certificate records revealed that he had only 55 hours of total flight time, 2.5 of which occurred in the preceding six months. *Id.* Prior to the day of the accident, Mr. Sikkelee had flown a Cessna 172 model aircraft for just 1.8 total hours. *Id.* Altogether, he had flown for approximately 5.6 hours in the year before the accident and not all in the preceding 60 days. *Id.* at 8–9.

This lawsuit was filed in 2007, in which Plaintiff alleges that the throttle body to float bowl screws had come loose and caused the engine to lose power. Lycoming contends that the screws were not defective and that the accident was likely caused by pilot inexperience, a botched 2004 overhaul, or any number of chance occurrences for which it was not legally responsible. As one of the Lycoming's experts reminded:

> When an aircraft crashes, there may be any one of a thousand and one reasons why it did so. The overall task confronting the investigator is one of initiating a program aimed specifically at eliminating those possibilities which could not conceivably have been involved under the particular circumstances.

Expert Report of Thomas W. Eagar, ECF No. 489-2, at 4 (quoting FAA *Aircraft Accident Investigator's Desk Reference Guide* (1991)).

In 2010, the Plaintiff entered into a settlement agreement with Kelly, who overhauled the carburetor in 2004. Kelly agreed to pay Plaintiff $2 million for the injuries suffered by her decedent in connection with the 2004 crash. ECF No. 145–46.

In 2014, I held that Plaintiff's claims against Lycoming were field preempted. In 2016, our Court of Appeals reversed that determination with instructions that I consider conflict preemption on remand.[17] I now hold that Lycoming is entitled to summary judgment.

---

[17] Specifically, our Court of Appeals instructed me as follows:

> We have no need here to demarcate the boundaries of those tort suits that will be preempted as a result of a conflict between state law and a given type certificate, nor which FAA documents incorporated by reference in a type certificate might give rise to such a conflict. While the parties responded to the FAA's submission by arguing for the first time in supplemental submissions whether the alleged design defect at issue in this case is a design aspect that was expressly incorporated into the type certificate for the Textron Lycoming O–320–D2C engine and what significance that might have for conflict preemption, we will leave those issues for the District Court to consider on remand.

Sikkelee, 822 F.3d at 702.

II. LAW[18]

"One of the principal purposes of the summary judgment rule is to isolate and dispose of factually unsupported claims or defenses, and we think it should be interpreted in a way that allows it to accomplish this purpose." *Celotex Corp. v. Catrett*, 477 U.S. 317, 323–24 (1986). Summary judgment is appropriate where "the movant shows that there is no genuine dispute as to any material fact and the movant is entitled to judgment as a matter of law." Fed. R. Civ. P. 56(a). "Facts that could alter the outcome are 'material facts,' and disputes are 'genuine' if evidence exists from which a rational person could conclude that the position of the person with the burden of proof on the disputed issue is correct." *Clark v. Modern Grp. Ltd.*, 9 F.3d 321, 326 (3d Cir. 1993) (Hutchinson, J.) (citing *Anderson v. Liberty Lobby, Inc.*, 477 U.S. 242, 255 (1986) and *Celotex*, 477 U.S. at 322).

"A defendant meets this standard when there is an absence of evidence that rationally supports the plaintiff's case." *Clark*, 9 F.3d at 326. "A plaintiff, on the

[18] Plaintiff suggests that the instant motions should be assessed using the standard for reconsideration. I disagree. The Third Circuit supplied explicit instructions for me to revisit these issues on remand. Regardless, even if viewed through the lens of reconsideration, changes in the applicable legal principles starting with *Tincher v. Omega Flex, Inc.*, 104 A.3d 328 (Pa. 2014), as well as what appear to be earlier errors applying that law, both justify my conclusions.

other hand, must point to admissible evidence that would be sufficient to show all elements of a *prima facie* case under applicable substantive law." *Id.*

"[T]he inquiry involved in a ruling on a motion for summary judgment or for a directed verdict necessarily implicates the substantive evidentiary standard of proof that would apply at the trial on the merits." *Liberty Lobby, Inc.*, 477 U.S. at 252. Thus, "[i]f the defendant in a run-of-the-mill civil case moves for summary judgment or for a directed verdict based on the lack of proof of a material fact, the judge must ask himself not whether he thinks the evidence unmistakably favors one side or the other but whether a fair-minded jury could return a verdict for the plaintiff on the evidence presented." *Id.* "The mere existence of a scintilla of evidence in support of the plaintiff's position will be insufficient; there must be evidence on which the jury could reasonably find for the plaintiff." *Id.* "The judge's inquiry, therefore, unavoidably asks . . . 'whether there is [evidence] upon which a jury can properly proceed to find a verdict for the party producing it, upon whom the onus of proof is imposed.'" *Id.* (quoting *Schuylkill & Dauphin Imp. Co. v. Munson*, 81 U.S. 442, 447 (1871)). Summary judgment therefore is "where the rubber meets the road" for a plaintiff, as the evidentiary record at trial, by rule, will typically never surpass that which was compiled during the course of discovery.

"[A] party seeking summary judgment always bears the initial responsibility of informing the district court of the basis for its motion, and identifying those

portions of the pleadings, depositions, answers to interrogatories, and admissions on file, together with the affidavits, if any, which it believes demonstrate the absence of a genuine issue of material fact." *Celotex*, 477 U.S. at 323 (internal quotations omitted). "[R]egardless of whether the moving party accompanies its summary judgment motion with affidavits, the motion may, and should, be granted so long as whatever is before the district court demonstrates that the standard for the entry of summary judgment, as set forth in Rule 56(c), is satisfied." *Id.*

Where the movant properly supports his motion, the nonmoving party, to avoid summary judgment, must answer by setting forth "genuine factual issues that properly can be resolved only by a finder of fact because they may reasonably be resolved in favor of either party." *Liberty Lobby*, 477 U.S. at 250. For movants and nonmovants alike, the assertion "that a fact cannot be or is genuinely disputed" must be supported by: (i) "citing to particular parts of materials in the record" that go beyond "mere allegations"; (ii) "showing that the materials cited do not establish the absence or presence of a genuine dispute"; or (iii) "showing . . . that an adverse party cannot produce admissible evidence to support the fact." Fed. R. Civ. P. 56(c)(1).

"When opposing summary judgment, the non-movant may not rest upon mere allegations, but rather must 'identify those facts of record which would contradict the facts identified by the movant.'" *Port Auth. of N.Y. and N.J. v.*

Affiliated FM Ins. Co., 311 F.3d 226, 233 (3d Cir. 2003) (Weis, J.). Moreover, "[i]f a party fails to properly support an assertion of fact or fails to properly address another party's assertion of fact as required by Rule 56(c), the court may . . . consider the fact undisputed for purposes of the motion." Fed. R. Civ. P. 56(e)(2). On motion for summary judgment, "[t]he court need consider only the cited materials, but it may consider other materials in the record." Fed. R. Civ. P. 56(c)(3).

"[A]t the summary judgment stage the judge's function is not himself to weigh the evidence and determine the truth of the matter but to determine whether there is a genuine issue for trial." *Liberty Lobby*, 477 U.S. at 249. "[T]here is no issue for trial unless there is sufficient evidence favoring the nonmoving party for a jury to return a verdict for that party." *Id.* "If the evidence is merely colorable . . . or is not significantly probative, summary judgment may be granted." *Id.* at 249–50 (internal citations omitted).

III. ANALYSIS

At first glance, this case appears to present puzzling questions of conflict preemption and proximate cause in the field of aviation. Yet, I have come to suspect that its complexity, like that of a shimmering oasis in the eyes of a weary wanderer, may be nothing more than a clever mirage flowing from strained interpretations of the law and academic daydreams divorced from fact. In

accordance with the discussion that follows, I hold that Plaintiff's state tort claims must fail because they are conflict preempted and lack proximate cause.

A. There Is No Genuine Dispute Of Material Fact As To Whether Plaintiff's State Tort Claims Are Conflict Preempted, Because The FAA's Regulations Rendered It Impossible For Lycoming To Unilaterally Implement What Design Changes Pennsylvania Law Allegedly Required Of It.

Federal law "shall be the supreme Law of the Land . . . any Thing in the Constitution or Laws of any State to the Contrary notwithstanding." U.S. Const., Art. VI, cl. 2. "It is basic to this constitutional command that all conflicting state provisions be without effect." *Maryland v. Louisiana*, 451 U.S. 725, 746 (1981). Thus, "under the Supremacy Clause, from which our preemption doctrine is derived, any state law, however clearly within a State's acknowledged power, which interferes with or is contrary to federal law, must yield." *Gade v. Nat'l Solid Wastes Mgmt. Ass'n*, 505 U.S. 88, 108 (1992) (internal quotation marks omitted).

In *Colacicco v. Apotex Inc.*, 521 F.3d 253, 261 (3d Cir. 2008), the United States Court of Appeals for the Third Circuit explained that there are three primary types of preemption: (1) "express" preemption, when Congress expressly states its intent to preempt state law; (2) "field" preemption, when Congress' intent to pre-empt all state law in a particular area may be inferred; and (3) "conflict" preemption, when state law is nullified to the extent that it actually conflicts with

federal law. On occasion, field and conflict preemption are jointly referred to as "implied" preemption. Only conflict preemption is at issue here.

The above framework necessarily means that "[e]ven in the absence of an express pre-emption provision," courts may find preemption where "it is 'impossible for a private party to comply with both state and federal requirements.'" *Mutual Pharm. Co. v. Bartlett*, 133 S. Ct. 2466, 2473 (2013) (quoting *English v. General Elec. Co.*, 496 U.S. 72, 79 (1990)). Importantly, a holding of preemption "is inescapable and requires no inquiry into congressional design where compliance with both federal and state regulations is a physical impossibility for one engaged in interstate commerce." *Florida Lime & Avocado Growers, Inc. v. Paul*, 373 U.S. 132, 142–43 (1963). Thus, "[t]he question for 'impossibility' is whether the private party could independently do under federal law what state law requires of it." *PLIVA, Inc. v. Mensing*, 564 U.S. 604, 620 (2011). When federal regulations prevent the defendant from "unilaterally" doing what state law required, the state law is conflict preempted. *Id.*

In recent years, the Supreme Court of the United States has issued two opinions examining conflict preemption in the context of federal regulations: *Mutual Pharmaceutical Co. v. Bartlett*, 133 S. Ct. 2466 (2013) and *PLIVA, Inc. v. Mensing*, 564 U.S. 604 (2011). Both cases weigh strongly in favor of conflict preemption here.

In *PLIVA v. Mensing*, Justice Clarence Thomas, writing for the Court, held that a system of regulations promulgated by the Food and Drug Administration (FDA) conflicted with certain state failure to warn claims regarding alleged labeling deficiencies in pharmaceuticals. 564 U.S. at 608–11. The narrow issue in *PLIVA* was thus whether generic drugmakers could independently change their labels after initial FDA approval. *Id.* a 614. The FDA filed a brief interpreting its regulation as prohibiting generic manufacturers from altering the drug label without such approval. *Id.* As the Court summarized, "The FDA denies that the Manufacturers could have . . . unilaterally strengthen[ed] their warning labels." *Id.* In support, it noted that an agency's views are controlling "unless plainly erroneous or inconsistent with the regulation[s]." *Id.* (quoting *Auer v. Robbins*, 519 U.S. 452, 461 (1997)).[19]

The state failure to warn claims in *PLIVA* were therefore conflict preempted because "[i]t was not lawful under federal law for the Manufacturers to do what state law required of them." *PLIVA*, 564 U.S. at 618. This was true in two respects. First, had the drugmakers independently changed their labels, they would have violated federal law. *Id.* at 618–19. Second, and just as important, the Court noted that even if the drugmakers could have eventually altered their labels by

[19] The Court also reminded that "[a]lthough we defer to the agency's interpretation of its regulations, we do not defer to an agency's ultimate conclusion about whether state law should be preempted." *Id.* n.3.

"requesting FDA assistance," the state tort claims would still be preempted. *Id.* at 619. This was so because the state claims "demanded a safer label"—they did not "instruct the Manufacturers to communicate with the FDA about the possibility of a safer label." *Id.* In other words, the possibility that the FDA might approve a drugmaker's proposed changes did not alter the conflict preemption calculus whatsoever.

PLIVA's second justification, that a future hypothetical determination by the agency was irrelevant to the preemption inquiry, holds particular weight in the present case. In fact, the tort claimants in *PLIVA* argued that "when a private party's ability to comply with state law depends on approval and assistance" from the agency, a finding of preemption requires that party "to demonstrate that the [agency] would not have allowed compliance with state law." *Id.* at 620 "This is a fair argument," Justice Thomas wrote, "but we reject it." *Id.*

Permitting litigants to consider hypothetical regulatory action would "render conflict preemption largely meaningless," and it would make most conflicts "illusory." *Id.* "We can often imagine that a third party or the Federal Government *might* do something that makes it lawful for a private party to accomplish under federal law what state law requires of it," the Court wrote. *Id.* "If these conjectures suffice to prevent federal and state law from conflicting," then "it is unclear when, outside of express preemption that the Supremacy Clause would have any force."

Id. at 621. Thus, contrary to what the Plaintiff might suggest here, conflict preemption cannot "take into account hypothetical federal action." *Id.* n.6

"To decide these cases," the *PLIVA* Court concluded, "it is enough to hold that when a party cannot satisfy its state duties without the Federal Government's special permission and assistance, which is dependent on the exercise of judgment by a federal agency, that party cannot independently satisfy those state duties for preemption purposes." *Id.* at 623–24. Justice Thomas then noted that in regulatory preemption cases such as these, "the possibility of possibility"—that is, the possibility that the agency will approve a requested change—does not defeat conflict preemption. *Id.* at 624.

Two years later, the Supreme Court extended its bright-line conflict preemption jurisprudence by deeming preempted several § 402A strict liability design defect claims in *Mutual Pharmaceutical Co., Inc., v. Bartlett*. 133 S. Ct. 2466 (2013).[20] *Bartlett* involved the same "onerous and lengthy" regulatory

[20] The *Bartlett* Court drew no meaningful distinction between strict liability claims premised upon § 402A of the Second Restatement and common law negligence claims. To the contrary, it noted that for preemption purposes, such claims typically fall hand-in-hand. This is true because "most common-law causes of action for negligence and strict liability do not exist merely to spread risk, but rather impose affirmative duties." *Id.* at 2474 n.1 (citing *Riegel v. Medtronic, Inc.*, 552 U.S. 312 (2008)). In *Riegel*, the Court explained that "common-law causes of action for negligence and strict liability do impose requirements and would be preempted by federal requirements." Indeed, in preemption cases, judicial "reference to a State's 'requirements' includes its common-law duties," and "a tort judgment therefore establishes that the defendant has violated a state-law obligation." *Id.* at 323–324 (internal citations omitted). This is particularly true as a matter of Pennsylvania law following the decision of our Supreme Court in *Tincher v. Omega Flex, Inc.*, 104 A.3d 328

scheme as did *PLIVA*, which required manufacturers to obtain FDA approval "before marketing any drug in interstate commerce." *Id.* at 2470–71. At the same time, state tort law had effectively forbidden manufacturers from selling products that were "unreasonably unsafe." *Id.* at 2470. Thus, when the prevalence of a dangerous side-effect associated with one of Mutual Pharmaceutical's drugs became more prevalent, state law required the company redesign the drug or its label in direct violation of a regulation that "prohibited [it] from making any unilateral changes." *Id.* at 2471–72. Accordingly, because "state law imposed a duty on Mutual *not* to comply with federal law," Justice Samuel A. Alito, Jr., writing for the Court, held that the tort law was "without effect." *Id.* at 2470.

As is the case here, the state law at issue in *Bartlett* imposed on the manufacturer "a duty to design his product reasonably safely for the uses which he can foresee." *Id.* 2473. *Compare Tincher*, 104 A.3d at 383 ("[An] entity engaged in the business of selling a product has a duty to make and/or market the product—which is expected to and does reach the user or consumer without substantial change in the condition in which it is sold—free from a defective condition unreasonably dangerous to the consumer." (internal quotation marks omitted). In addition, the state at issue in *Bartlett* had applied the "risk-utility approach," one of two applicable approaches in Pennsylvania after *Tincher*, pursuant to which courts

(Pa. 2014), a decision clarifying strict liability and negligence principles, to which I turn my attention more fully herein.

must consider "the usefulness and desirability of the product to the public"; "whether the risk of danger could have been reduced without significantly affecting either the product's effectiveness or manufacturing cost"; and "the presence and efficacy of a warning to avoid an unreasonable risk of harm from hidden dangers." *Id.* at 2475. Thus, because the regulations as interpreted by the FDA prevented the drugmaker from "independently changing" its products, "federal law prohibited Mutual from taking the remedial action required to avoid liability under [state] law." *Id.* at 2476.[21]

---

[21] Impossibility that an aircraft manufacturer might face when attempting to alter the essence of its product is thoroughly discussed herein. That being said, I note that the suggestion that Lycoming might have issued warning labels or changed existing packaging makes no legal difference here. First, Plaintiff has not suggested that this is a failure to warn of known dangers case. To the contrary, the precise action that Plaintiff alleges Lycoming failed to take was redesigning the engine's carburetor. Moreover, warning labels would not have aided Lycoming in satisfying what state law required of it. Specifically, state failure to warn claims are effective only where inclusion of the alleged omission would have remedied the plaintiff's injures. *See Simon v. Wyeth Pharm., Inc.*, 989 A.2d 356, 368 (Pa Super. Ct. 2009) ("Proximate cause is an essential element in failure-to-warn cases involving prescription medications. The law requires that there must be some reasonable connection between the act or omission of the defendant and the injury suffered by the plaintiff.") (internal quotation marks omitted). *See also Demmler v. SmithKline Beecham Corp.*, 671 A.2d 1151, 1155 (Pa. Super. Ct. 1996) ("In the duty to warn context, assuming that plaintiffs have established both duty and a failure to warn, plaintiffs must further establish proximate causation by showing that had defendant issued a proper warning to the learned intermediary, he would have altered his behavior and the injury would have been avoided."). As the *Bartlett* Court emphasized, preemption does not turn on semantic differences between various case theories but upon whether the state claims fall "outside the class of claims" that federal law preempts. 133 S. Ct. at 2479 (quoting *Bates v. Dow Agrosciences LLC*, 544 U.S. 431 (2005)). In addition, such claims would likely nevertheless be preempted regardless by the FAA's reservation of power to issue appropriate Airworthiness Directives and its guidance as to individualized Service Bulletins or Maintenance Manuals. *See, e.g.*, FAA Order 8110.117A, *Service Bulletins Related to Airworthiness Directives*, https://www.faa.gov/documentLibrary/media/Order/8110_117A.pdf; FAA Advisory Circular 20-176A, *Service Bulletins Related to Airworthiness Directives and Indicating FAA Approval on Service Documents*, https://www.faa.gov/documentLibrary/media/Advisory_Circular/AC_20-176A.pdf. Finally, a

Accordingly, in the wake of *PLIVA* and *Bartlett*, if Lycoming could not independently do what Pennsylvania state tort law may have required of it, Plaintiff's claims are also conflict preempted. That must be the case here. "Pre-emption analysis requires us to compare federal and state law. We therefore begin by identifying the state tort duties and federal [ ] requirements applicable to the Manufacturers." *PLIVA*, 564 U.S. at 611.

In *Tincher v. Omega Flex, Inc.*, the Supreme Court of Pennsylvania confirmed that state tort claims spring from "breaches of duties imposed by law," which duties represent the Commonwealth's judgment on "matter[s] of social policy." 104 A.3d at 387. "In Pennsylvania, the question of whether those who make or market products have duties in strict liability (in addition to negligence) has been answered in the affirmative." *Id.* at 389. Thus, after *Tincher*, regardless of whether a strict liability action under § 402A is viewed through the lens of the consumer expectations or risk-utility tests, it is clear that a manufacturer "has a duty to make . . . the product . . . free from a defective condition unreasonably dangerous to the consumer." 104 A.3d at 383. Moreover, although "[t]he duty spoken of in strict liability is intended to be distinct from the duty of due care in negligence," that both torts incorporate the concept of duty "obviously reflects the

---

fallback on labelling changes must necessarily fail to defeat preemption challenges in cases where the complained-of defect goes to the essence of the product itself. Otherwise, that fallback would make the Supreme Court's conflict preemption jurisprudence wholly illusory. "To hold otherwise would render impossibility preemption 'all but meaningless.'" *Bartlett*, 133 S. Ct. at 2447 n.3 (quoting *PLIVA*, 564 U.S. at 621).

negligence roots of strict liability." *Id.* at 388–89. The requirements instituted by these state law duties are precisely the kinds that gave rise to conflict preemption in *PLIVA* and *Bartlett*—in fact, they are identical in all practical respects to those in *Bartlett*.

The next step is a review of federal law, which by virtue of the operative FAA regulations, is set forth in Part I of this Memorandum Opinion. "Where Congress has delegated the authority to regulate a particular field to an administrative agency, the agency's regulations issued pursuant to that authority have no less preemptive effect than federal statutes, assuming those regulations are a valid exercise of the agency's delegated authority." *PPL Energyplus, LLC v. Solomon*, 766 F.3d 241, 253 (3d Cir. 2014).[22] To summarize that law, I note that FAA approval is required for any major or minor changes to an article's type design, as well as for any major alteration. A major alteration is one that "might

---

[22] The same is true of the FAA's Orders reviewed above, to the extent that they are relied upon herein:

> The FAA's orders, as agency manuals without the force of law, are not afforded deference under *Chevron U.S.A., Inc. v. Natural Resources Defense Council, Inc.*, 467 U.S. 837 (1984). Nevertheless, we conclude that the definition of "prudent" found in these orders is entitled to deference pursuant to *Skidmore v. Swift & Co.*, 323 U.S. 134 (1944). Under *Skidmore*, the weight courts accord an agency interpretation depends on "the thoroughness evident in [the agency's] consideration, the validity of its reasoning, its consistency with earlier and later pronouncements, and all those factors which give it power to persuade, if lacking power to control." 323 U.S. at 140.

Natural Resources Defense Council, Inc. v. F.A.A., 564 F.3d 549, 564 (2d Cir. 2009) (internal quotation marks omitted).

appreciably affect weight, balance, structural strength, performance, powerplant operation, flight characteristics, or other qualities affecting airworthiness." Further, when a DER acts to implement a type design change or alteration that otherwise requires FAA approval, he acts on behalf of the FAA and within the scope of his designation, not in a private capacity.

PLIVA and *Bartlett*, together with a dose of common sense and pragmatism, demand a finding that Lycoming was prohibited by those regulations from making the design changes about whose omission Plaintiff has complained. In particular, recall that Plaintiff alleges that the "throttle body to float bowl screws came loose due to the faulty design of the lock tab washers as well as gasket set." Pl.'s Statement of Facts, ECF No. 488, at ¶ 16. As for alternative designs, Plaintiff suggests that Lycoming could have switched the manner in which the carburetors installed in its engines had their two halves fastened by, for instance, "using a fuel injection systems [*sic*] in lieu of a carburetor, safety lock wire on the throttle body to bowl screws, and different gasket material." *Id.* at ¶ 17.

Plaintiff's counterarguments to Lycoming's suggestion of conflict preemption fail for two broad reasons. First, the FAA's regulations forbid independent implementation of those changes, and the facts here plainly support that conclusion. Second, even assuming that Lycoming were to implement the suggested design changes, it is unclear whether the subject tort duty would have

been met, as Lycoming's decision could not guarantee future design decisions by aftermarket parts manufacturers like Kelly.

The operative type certificate would not have permitted Lycoming to install a different carburetor model, nor would the instant PMA have permitted Kelly to change the carburetor's inner workings. In fact, when the FAA issued the engine's type certificate to Lycoming, it explicitly approved the MA-4SPA model carburetor on the type certificate data sheet as the only carburetor that could be installed in the engine. Def.'s Statement of Facts, ECF No. 533, at ¶ 4. As the FAA has reiterated, "a manufacturer is bound to manufacture its aircraft or aircraft part in compliance with the type certificate." FAA Ltr. Br. at 10–11.

Then, when the FAA issued the PMA authorizing Kelly to manufacture replacement parts for MA-4SPA model carburetors, the FAA specifically approved the design of the gasket, slotted hex head screws, and lock washers at issue here, as well as the use of those parts in the throttle body to float bowl attachment mechanism. ECF No. 533, Exs. 1–7. These facts are well chronicled in briefing by Christopher Carlsen, Esquire, counsel for Lycoming. *See* ECF No. 534.

Moreover, as recited earlier, the regulations required Kelly to ensure that all MA-4SPA model carburetor replacement parts that it manufactured and sold pursuant to its PMA conformed to the design that the FAA had approved. *See, e.g.*, 14 C.F.R. § 21.316 ("Each holder of a PMA must . . . (b) Maintain the quality

system in compliance with the data and procedures approved for the PMA; (c) Ensure that each PMA article conforms to its approved design and is in a condition for safe operation"). Absent additional approval by the FAA or a corresponding amendment to Kelly's PMA, neither of which Kelly had at any time relevant to this case, it could not lawfully manufacture and sell replacement parts that were different from the parts actually approved for use on the replacement carburetor.

Plaintiff's argument that the issuance of Kelly's PMA for the replacement gasket, screw, and lock washer did not involve the FAA's approval of the design of the attachment mechanism itself is unavailing and too clever by half.[23] These parts have no function apart from collectively attaching the throttle body to the bowl in the MA- 4SPA carburetor. In fact, during the November 2013 Rule 104 hearing,

[23] In my view, Plaintiff has also placed far too great emphasis on whether the alleged modifications would be made to parts that previously had been expressly approved the FAA. This test derives from the FAA's interpretation of conflict preemption principles and not of its own regulations. *See* FAA Ltr. Br. at 10. Make no mistake, *PLIVA* and *Bartlett* clarify that the test for conflict preemption is whether the defendant may take independent action under federal law. Whether the FAA had at some time in the past expressly approved the article in question would appear to strengthen a conflict preemption defense (on the assumption that previously approved articles typically need future approval to implement modifications). However, nothing in either *PLIVA* or *Bartlett* requires prior express approval. To the contrary, the question is whether, at the time of the alleged breach of duty, it was impossible for the defendant to unilaterally satisfy both state and federal law. To the extent that a prior aircraft article had not been expressly approved in the past at the time of its installation but would require express approval for any future modifications, it seems axiomatic that state tort claims requiring immediate modifications to that article would give rise to a conflict preemption defense. Further, to the extent that an article received express approval in the past but could be modified freely at the time of the alleged breach, conflict preemption would be a less fitting defense. That follows logically because the pertinent regulations balance the quantum of approval required with the extent of the proposed modification.

plaintiff's expert witness, Mr. Sommer, described at length for this Court how crucial it is that all of those parts work as a unit so that the carburetor halves do not separate and cause the engine to lose power.

Plaintiff's attempt to separate the FAA's approval of each Kelly replacement part from its approval of the attachment mechanism itself is refuted by Kelly's own rendition of the PMA process:

> Thus, to obtain approval for its replacement articles, Kelly tested an OEM carburetor for a period of time (*e.g.*, 150 hours), and then tested a carburetor that contained Kelly parts for the same period of time. It then prepared a report documenting that its parts performed just as well or better than the OEM parts.

ECF No. 545 at 10. Plaintiff does not contest that the only function performed by the gasket, screws, and lock washers is to work together as the design feature that fastens the carburetor throttle body to the bowl. I agree with Mr. Carlsen that it is therefore difficult to fathom that Kelly and the FAA analyzed 300 hours of carburetor operation "simply to confirm that the gasket performed as a gasket, the screw as a screw, and the lock washer as a lock washer, all while ignoring whether the attachment mechanism they formed operated properly to hold the carburetor together"—the precise operation complained of here. *See* ECF No. 550 at 5.

In fact, a number of the proprietary drawings that Kelly submitted to the FAA in support of its PMA were attached under seal for my review. ECF No. 533, Exs. 1–6. I also reviewed the 6-page PMA Listing Supplement, which the FAA

supplied to Kelly to indicate that "the parts listed below" were approved "by test and analysis per Federal Regulation (FAR) 21.303(c)." ECF No. 533-7. At page 3, that list indicates that use of the particular throttle body to float bowl hex head screws were approved by the FAA. *Id.* at 4. The Plaintiff admits "that the FAA at various points in time approved the use of each of the individual articles listed (gasket, screw, and washer) on MA-4SPA carburetors generally as acceptable substitutes for OEM parts." *See* Pl.'s Resp. to Def.'s Statement of Material Facts, ECF No. 546, at ¶ 22.

Moreover, the linchpin under *PLIVA* and *Bartlett* is not so much express historical approval but whether immediate regulatory approval would be required to implement the proposed change at the time of the alleged breach of duty. It is evident that neither Lycoming nor Kelly could make the requested change here without first obtaining FAA approval.[24] Thus, Plaintiff retreats to a fallback

[24] Moreover, Plaintiff has made sporadic arguments suggesting that Lycoming possessed broader certification that would have allowed it to install one of a small selection of distinct carburetor models in its engine in 1969. Again, it is rather unremarkable that a manufacturer in a products liability case could theoretically comply with state and federal law by halting production of the subject product or producing different ones altogether. The Court in *Bartlett* expressly rejected arguments like this one, explaining that, when taken to their logical extreme, such lines of reasoning would defeat preemption by the mere suggestion that the manufacturer could have abstained from selling the particular product in the first place or could have left the market altogether. The Court explained that it was "undeterred by the prospect that [the defendant] could have complied with both state and federal requirements by simply leaving the market." *Bartlett*, 133 S. Ct. at 2478. Similar here, because Plaintiff concedes that the engine was not defective when it left Lycoming's hands in 1969, the issue as far conflict preemption goes is not whether Lycoming could have ceased producing this particular carburetor engine altogether in 1969. Rather, the question is whether, once subsequent modifications allegedly rendered the product defective, Lycoming had the power

argument: that the alleged omission here would have constituted a minor alteration not affecting the type design were either Lycoming or Kelly to implement it. That is unsupported by the clear terms of the regulations and is logically contradictory with the premise of this action.

Plaintiff suggests that the proposed modification would be a minor one because "the use of safety wire is common, can be done by any trained mechanic, and would not adversely affect . . . the engine." ECF No. 564 at 10. Perhaps those suggestions are factually accurate and perhaps they are not, but one thing is certain: none of them encapsulates the standard established by the FAA in its regulations for distinguishing major alterations from minor ones.

Recall that major and minor alterations are defined at 14 C.F.R. § 1.1. A major alteration is any alteration not listed in the aircraft, aircraft engine, or propeller specifications that (1) might appreciably affect weight, balance, structural strength, performance, powerplant operation, flight characteristics, or other qualities affecting airworthiness; or that (2) is not performed according to accepted practices or cannot be performed by elementary operations. *Id.* All other alterations are minor alterations. *Id.* Appendix A to 14 C.F.R. § 43 provides as follows:

---

to unilaterally remedy those alleged defects at that later time. The answer under the regulations is that it did not.

(b) Major Alterations—

. . .

(2) Powerplant major alterations. The following alterations of a powerplant when not listed in the engine specifications issued by the FAA, are powerplant major alterations:

(vi) Conversion of an aircraft engine from one approved model to another, involving any changes in compression ratio, propeller reduction gear, impeller gear ratios or the substitution of major engine parts which requires extensive rework and testing of the engine.

(vii) Changes to the engine by replacing aircraft engine structural parts with parts not supplied by the original manufacturer or parts not specifically approved by the Administrator.

(viii) Installation of an accessory which is not approved for the engine.

(ix) Removal of accessories that are listed as required equipment on the aircraft or engine specification.

(x) Installation of structural parts other than the type of parts approved for the installation.

(vi) Conversions of any sort for the purpose of using fuel of a rating or grade other than that listed in the engine specifications.

Even from the outset, reliance on these definitions is perhaps unnecessary, as we know from the regulations and the FAA's Letter Brief that any type design change (that is, any change affecting any element of the type design supporting a type certificate) would require FAA approval. That is an important aspect of this

case, as the type design includes (1) drawings and specifications; (2) structural information on materials and dimensions; (3) a showing of continued airworthiness; (4) inspection and preventative maintenance programs; and (5) any other information relevant to airworthiness, noise, fuel venting, and emissions determinations. 14 C.F.R. § 21.31.

Certainly then, it is difficult to advance the position that a change in the mechanism that powers the engine itself, indeed a change that would allegedly increase its efficiency, would not be relevant to the type design categories recited above. For starters, such a change would likely need to be drawn and specified and could impact airworthiness. Just the same, this fallback argument has always struck me to be paradoxical to Plaintiff's theory of the case. If the alleged omission was a minor one, then by definition, it had no effect on the aircraft engine's structural strength, reliability, operational characteristics, or airworthiness. If this has been true all along, then it certainly would seem that this litigation should be over, or rather, should never have begun. Although I have confronted the case in a somewhat heady posture dealing with conflict preemption, the underlying claims are nothing more than state law tort actions, which require proximate causation. If the alleged breach of duty had no appreciable effect on the engine's reliability, airworthiness, structure, or operation, then proximate cause cannot be met. This is

yet another manifestation of the damned-if-you-do, damned-if-you-don't motif that seems to riddle Plaintiff's stance on the pending motions.[25]

Further, Plaintiff's proposed change goes to perhaps the most critical component of the aircraft: the unit that vaporized fuel in a way that guaranteed the delivery of sufficient fuel to other components of the engine. That such changes could be made without approval is unsupported by the regulations cited above and by the history of the case.

In fact, we know that Kelly, albeit in the parallel context of a PMA, did in fact submit the drawings required by regulation in order to obtain FAA approval. Moreover, when Kelly received its PMA authorization in this case, it received

---

[25] Perhaps what motivates Plaintiff's counterargument is her counsel's reluctance to acknowledge that "the need for a DER signature therefore prevents Lycoming from acting unilaterally to comply with state law." ECF No. 564 at 14. In other words, because our Court of Appeals has held that the FAA regulations do not field preempt related state tort claims, Plaintiff suggests that there must be some universe of claims that survives conflict preemption as well—that conflict preemption cannot effectively accomplish in one particular case what field preemption would have done in all cases. I am not so uneasy about the opposite proposition. Nothing in *PLIVA* and *Bartlett* suggests that field preemption and conflict preemption cannot be coextensive or that conflict preemption may only apply to a lesser universe of claims than field preemption otherwise might have. Further, nothing in those decisions suggests that claims that are not conflict preempted must otherwise be legally or financially viable. Thus, where a hypothetical regulatory regime included an explicit state law savings clause but yet required agency approval of any product design changes, it is not a far stretch to conclude that under *Sikkelee*, *PLIVA*, and *Bartlett*, state tort claims are not expressly field preempted, but to the extent that they require immediate design changes, those claims would be conflict preempted. Of course, this is a fact-specific inquiry that depends on the nature of each claim and the operative regulations. *See, e.g.*, *In re Incretin-Based Therapies Products Liability Litig.*, 142 F. Supp. 3d 1108, 1116 (S.D. Cal. 2015) ("The determination that conflict preemption is a fact-intensive analysis is consistent with the conclusion that it presents only a question of law suitable for determination by the Court through summary judgment.").

express approval from the FAA for precisely the design features that Plaintiff claims were defective. The drawings for the gasket and the lock tab washer are stamped "FAA Approved" or "FAA-PMA Design Approval ANE-140." ECF No. 533 Exs. 1–4. The FAA PMA approvals for the gasket, lock tab washer, and screw are signed by "Jay J. Pardee, Manager, Engine Certification Office, ANE 140." *Id.* Exs. 5–7. Minor changes to certain parts, including the gasket material that Sikkelee's expert Mr. Sommer claims is defective on page 29 of his expert report, all were approved by "Paul C. Sconyers, Associate Manager, ACE-117A, Atlanta Aircraft Certification Office." *Id.* Ex. 6; ECF No. 546 Exs. 6–7.

It too appears from the record that Lycoming requested FAA approval to use hex head screws in its throttle body to float bowl design in the first place. Lycoming requested that approval jointly with Marvel-Schebler in February 1965. ECF No. 546-1. The letter states that it is "requesting approval" from the FAA for the "new method of safety locking the float bowl screws by . . . a hex head screw." *Id.* "Before permitting its use in production," Lycoming wrote, "we request your concurrence with . . . approval of this locking method." *Id.* In response, the FAA determined in the Statement of Compliance of Aircraft or Aircraft Components with Civil Air Regulations that the hex head screw and lock tab washer in fact complied with the applicable requirements of the Civil Air Regulations. ECF No. 549 at ¶ 28. In July 1965, it wrote the following to Lycoming in reply to its request

for approval: "An amendment . . . was published in the June 24, 1965 issue of the Federal Register which authorizes the use of the new locking device." ECF No. 546-2.

Neither does it make a difference that certain changes in the design in the case might have been made by way of first obtaining DER approval. DER approval *is* FAA approval, and any argument to the contrary is creative but unavailing. Recall that DER approval is not some lower threshold of approval, but rather is a more efficient mechanism by which the FAA expedites its own grants of approval. It does not make a difference that the DER may be nominally employed by a private entity either. The emphasis in such cases in on substance over form, and the law is clear that when a privately hired DER acts, he or she acts in the capacity of an official FAA approver, bounded by the scope of the pertinent FAA delegation. Thus, DER approval fails to move the needle even a bit as far as conflict preemption goes.

Throughout this chapter of the litigation, the retort Plaintiff's counsel has offered in response to the clear text of the regulations is that Lycoming actually should be held liable for Kelly's alleged design omissions because Kelly was bound by Lycoming's independent business decisions to manufacture the carburetor in the manner it did. That argument is logically flawed and divorced from the facts. For one, if Kelly was bound by the type designs that supported

Lycoming's type certificate, then, as counsel for Lycoming, John P. O'Flanagan, Esquire, accurately pointed out at oral argument, this case is over, because the type design could not be altered by anyone (especially an aftermarket parts manufacturer Kelly) without FAA approval. That is the catch-22 that riddles Plaintiff's opposition to the present two motions and hints that at some earlier time, this case traced a path leading to nowhere but a maze's dead end. If this case truly is about Kelly indenturing itself in 2004 to a set of designs approved in the 1960s—and I certainly have my doubts about that—then conflict preemption has taken effect because Plaintiff offers no feasible explanation as to how Lycoming could have changed the type design without preapproval if Kelly (the sole PMA holder itself) could not have done the same.

To this, Plaintiff concedes that Kelly may have a conflict preemption defense based upon either the type certificate or the PMA here, but that does not mean Lycoming can enjoy the benefit of that defense too. As to why that is the rule, Plaintiff offers nothing but silence. As Mr. O'Flanagan rightly noted at oral argument, when a defendant stands in the shoes of another in terms of liability, it stands in the shoes of that entity in terms of defenses as well. That is correct, and to be frank, given that neither entity could alter the initial type design without FAA approval, this second layer of preemption is something of a belt-and-suspenders point at this juncture of the analysis. Nevertheless, I note that the United States

Court of Appeals for the Ninth Circuit, applying many of the same preemption cases outlined above, has explained in a products liability case that a preemption determination applies "equally to manufacturers and distributors." *Taylor AG Indus. v. Pure-Gro*, 54 F.3d 555, 562 (9th Cir. 1995). "Our decision applies equally to all defendants, the Ninth Circuit concluded, because "the analysis focuses not on whom the legal duty is imposed, but on whether the legal duty constitutes a state law requirement to provide information in addition to or different from the [regulated] label." *Id.* at 561 n.3. Accordingly, Lycoming's conflict preemption defense prevails not only because it could not alter the type certificate or Kelly's PMA absent FAA approval, but also because neither could Kelly.

Relatedly, it is worth reemphasizing that even if Lycoming could have implemented the proposed modification, nothing would ensure that Kelly would follow suit and input its own design changes on its own aftermarket parts. In fact, had Lycoming received certification for an alternative method by which to fasten the throttle body to the float bowl, Kelly might just have likely decided that because its products conform to at least one type of carburetor design used on Lycoming's engines, changing all of Kelly's parts would represent a cost inefficiency. That is a causal conundrum skirted by Plaintiff: certification of

another method does not imply decertification of all other methods or strict adherence to the newest alternative by independent aftermarket suppliers.

I said before that Plaintiff's argument is divorced from the facts of this case because, of course, we actually know from the record that Kelly was not bound by the type designs supporting Lycoming's type certificate—and not to be duped, we know that Kelly knew as much too. How "controlling" Kelly viewed Lycoming's designs is no mystery whatsoever. Quite the opposite, when given the opportunity to follow Lycoming's type design, Kelly dispensed with Lycoming's prior workmanship, overhauling a type-certificated article (the original carburetor) by excising it from the engine and replacing it with a conglomerate melded together using one part from the era of counterculture and the other from the age of disco. Certainly, if Kelly was so bound by Lycoming's decisions, a scorched-earth engine overhaul was a curious way to pay Lycoming deference. And if Kelly *ex ante* had no qualms about that design debacle, certainly it should have felt free to disregard other tertiary aspects of the carburetor's design to which it now claims to have been strictly tethered.

I note too that a certain superficial argument tends to recur in implied preemption cases like this one. That argument questions how federal regulations can ever preempt state tort law if both regimes serve the same end, for instance, ensuring product safety. Framing the inquiry at such a high level of abstraction

misstates the operative question from *PLIVA* and *Bartlett*. Implied preemption does not hinge upon whether the policy justifications of the two regimes coexist harmoniously. In fact, they often will. Rather, the critical inquiry is whether a regulated party can unilaterally comply with both regimes simultaneously. Where one cannot, concepts of supremacy clarify that the state law has no force.

An apt illustration of this concept is the comparison between a state tort law that requires a given change to make a product safer and a corresponding federal regulation that requires exactly the same change, a hypothetical discussed at oral argument. If the federal regulatory regime also requires agency approval before that change could be made, the state tort law must be impliedly preempted if an enterprising litigant seeks to hold a manufacturer liable under such a theory.

Although these imagined tort law and regulatory regime appear identical in substance, they are not. The federal regulation, which predicates any alterations on agency approval, contains an element that state tort law does not share. Moreover, compliance with both is mutually exclusive: Either the manufacturer maintains the status quo and breaches its state tort duty, or it unilaterally satisfies that state duty and immediately runs afoul of the regulation's approval requirement. The proper question is thus whether unilateral *compliance* is simultaneously possible.

Neither is it persuasive to suggest that an approval requirement is a tertiary component of a regularly scheme, like a signature or a rubber stamp, that therefore

may be overlooked in favor of substance during implied preemption inquiries. Quite the opposite, permitting and approval schemes are a major channel through which agencies regulate. To discern no implied preemption on that ground would necessarily require a finding that violation of the agency's permitting or approval processes was of no consequence for regulated actors. In other words, to adopt this argument would gut regulatory regimes nationwide by a judicial thumbing of the nose. The propriety of permitting and approval requirements is undoubtedly a question for the executive, not politically-insulated judges.

Another rebuttal is in order. Plaintiff suggests that this Court should not follow *PLIVA* and *Bartlett* but should adhere to a decision by the Supreme Court in *Wyeth v. Levine*, 555 U.S. 555 (2009) and a decision by the Third Circuit captioned *In re Fosamax (Alendronate Sodium) Product Liability Litigation*, 852 F.3d 268 (3d Cir. 2017). Despite counsel for Plaintiff's protestations to the contrary, neither case is applicable here.

Wyeth involved the same regulations as did *PLIVA* and *Bartlett*, but because the defendant in *Wyeth* was a brand-name drug manufacturer, a regulatory exception permitted it "to unilaterally strengthen its warning" without prior approval. 555 U.S. at 573. The *PLIVA* and *Bartlett* Courts distinguished *Wyeth* on the ground that the particular regulatory exception at issue in *Wyeth* was not available in those two successor cases, both of which involved generic drug

companies.[26] The FDA retained the authority to reject any changes made pursuant to that regulatory exception. *Id.* at 571. Accordingly, the Court held that, in order for conflict preemption to apply in this back-and-forth posture, the drug maker had to show by "clear evidence" that the FDA was likely to ultimately reject the any change instituted by way of the exception. *Id.* Because no such regulatory exception permitting revocable unilateral action is provided for in the applicable regulations here, *Wyeth* does not apply.

I would say the same about application of the Third Circuit's decision in *Fosamax*. Although it is a precedential decision, advocating its application in this context sounds more in sophistry than in substance. *Fosamax* involved precisely the same nuanced regulatory exception as did *Wyeth*. 852 F.3d at 273. The only reasonable reading of these decisions is that they govern this particular regulation or more broadly, regulatory regimes that allow for unilateral yet revocable

[26] Counsel for Plaintiff, inadvisably in my view, has spent some time insisting that Lycoming and other type certificate holders are more analogous to brand-name drug manufacturers, whereas PMA holders and aftermarket part manufacturers like Kelly are more akin to generic drug companies. Although the analogy is somewhat strained, it is nevertheless a distinction without a difference when applied to the aviation context. The only reason the brand-name versus generic distinction was relevant in the pharmaceutical cases was because brand-name manufacturers enjoyed the benefit of a regulatory exception that allowed them to unilaterally modify their products. Conflict preemption did not turn on a drug maker's status as a brand-name or generic manufacturer *per se* or its position in the market. Instead, the unilateral action exception was what carried the day legally. In fact, should the exception have applied to generic makers and not to brand-name companies, the Court's three pharmaceutical cases likely would have yielded the opposite outcome each time. In the aviation context, however, there is no regulatory exception allowing unilateral action that applies to type certificate holders and not PMA holders or *vice versa*, and even if there were such a mechanism, it does not apply here. Consequently, the comparison to *Wyeth* is unsound.

approval. Because, as outlined above, no type certificate holder may make major or minor type design changes or major alterations without FAA approval and because no such regulatory alternative is applicable here, *Wyeth* and *Fosamax* are readily distinguished.

Not to be dissuaded, counsel for Plaintiff argues that the *Wyeth* and *Fosamax* courts intended the "clear evidence" standard to be trans-substantive—to apply to *any* conflict preemption defense involving *any* product subject to *any* federal regulatory regime. I confirmed that position at oral argument:

> THE COURT: So is clear evidence then not taken from [this particular] regulatory process? It's just an evidentiary standard in your view?
>
> MR. SINGH: That's correct. That's exactly, I think, what the Court said in *Fosamax*.
>
> . . .
>
> The standard in *Wyeth* is the clear evidence standard discussed in the *Fosamax* case. Right. You say unless the FDA would have clearly rejected a proposed change, they don't get to claim impossibility preemption. We don't see any reason necessarily to cabin that only to cases where completely unilateral action is available as a first step.

May 2017 Tr. at 146:16– 20; 170:19–24. That argument is unfaithful to the law and wholly impractical. There are many reasons why the clear evidence rule must

cabined to the circumstance in which manufacturers can take unilateral yet revocable action, a number of which I turn to now.

First, *Wyeth's* concept of "clear evidence" arose in the context of a unique pharmaceutical regulation known as the "changes-being effect" or "CBE" provision. *See PLIVA*, 564 U.S. at 624. That provision allows a brand-name drug manufacturer "to unilaterally strengthen its warning without prior FDA approval." *Id.* (internal quotation marks omitted). Importantly, however, the FDA retained the right to later rescind any changes made by a manufacturer as part of the CBE process. *Id.* Thus, *Wyeth's* clear evidence standard applies only to those rare cases in which a manufacturer can take immediate, unilateral action to satisfy both federal and state law, but where that unilateral action is also subject to eventual regulatory clawback. Unsurprisingly, *Fosamax* involved precisely the same regulatory provision. *In re Fosamax (Alendronate Sodium) Products Liability Litig.*, 852 F.3d 268, 293 (3d Cir. 2017).[27]

---

[27] Not only did *Fosamax* pertain to a unique regulatory provision that is not at issue here, but the panel also observed that "[a] state-law failure-to-warn claim will only be preempted if a jury concludes it is highly probable that the FDA would not have approved a label change." *Id.* at 293. Relegating such a legally-specialized determination to lay jurors reinforces, in my view, that the clear evidence standard could not possibly have been meant to apply trans-substantively to every regulatory framework that might ever be the subject of a federal conflict preemption dispute. *Id.* at 293. In fact, to construe *Fosamax's* holding any other way would not only be highly unworkable but would also contravene established Third Circuit and Supreme Court precedent. *See In re Federal-Mogul Global Inc.*, 684 F.3d 355, 364 n.16 (3d Cir. 2012) (Scirica, J.) ("The scope of preemption presents a pure question of law, which we review *de novo*."); *Horn v. Thoratec Corp.*, 376 F.3d 163, 166 (3d Cir. 2004) ("This Court also exercises plenary review over a district court's preemption determination, as it is a question of law."); *Geier v. Am. Honda Motor Co.*, 529 U.S. 861, 873–74 (2000) ("A 'special

Further, Plaintiff's argument that "clear evidence" is a broad-based conflict preemption standard would violate the Supreme Court's clear admonition in *PLIVA* and *Bartlett* that "the possibility of possibility"—that is, the possibility that the agency will approve a requested change—does not defeat preemption. *PLIVA*, 564 U.S. at 624. Indeed, it is quite curious that, as Mr. Singh suggests, the *Wyeth* Court instituted a universal clear evidence rule for all future conflict preemption cases, when two years later in *PLIVA*, the Court mentioned the term "clear evidence" only once in the entire body of its opinion (to distinguish *Wyeth*) and not at all in *Bartlett*. If *Wyeth* set forth the applicable standard, it appears as though the Court itself is unaware of as much.

Second, Plaintiff's academic proposal for detecting preemption requires talents more attributable to street-corner charlatans than busy federal judges. Were Plaintiff to have her way, district court judges faced with preemption issues simply could "predict" how an agency would react to a proposed design change, imagining whether denial would be "unlikely," "likely," or "clearly likely." Just how, precisely, would a district court distinguish among proposals who were "clearly likely" to be denied and those that were not? Is it a straightforward determination that can be made on text of the regulations themselves? According

---

burden' would also promise practical difficulty by further complicating well-established pre-emption principles that already are difficult to apply. . . . Nothing in the statute suggests Congress wanted to complicate ordinary experience-proved principles of conflict pre-emption with an added 'special burden.'").

to Plaintiff, unfortunately it is not. Instead, her blueprint for resolution of preemption disputes requires each party to obtain an expert in that particular agency's regulations, who will then offer their own opinions as to what the subject regulations mean and how they should apply to the instant case. Afterwards, the factfinder would make its own determination based upon that testimony. In other words, Plaintiff's proposal requires not one but at least *two* layers of considerable speculation.

This off-the-cuff plan kicks judicial economy to the curb—the plain consequence of a conjectured system in which separation of powers and federalist principles carry little weight. Even more, the United States Supreme Court has repeatedly rejected the notion that preemption may be avoided simply because a district court is confident in its ability to predict what action a regulatory body might take on hypothetical facts. A leading example is *Arkansas Louisiana (Arkla) Gas Co. v. Hall*, 453 U.S. 571 (1981). In certain provisions of the Natural Gas Act, Congress granted the Federal Energy Regulatory Commission the sole authority to approve rates that natural gas sellers may charge in connection with the sale and transportation of their shipments. *Id.* at 576–77. The lower court in *Arkla* had awarded a natural gas seller higher retroactive rates than the Commission had previously approved when one of the seller's purchasers had breached a most favored nations provision. *Id.* at 575. The lower court reasoned that, by awarding

this higher penalty rate, state contract law and the federal rate regulations were not in conflict because "had [the seller] filed rate increases with the Commission," it was likely that those increases "would have been approved." *Id.* at 575.

Thus, the central issue in *Arkla* was whether a court can avoid a finding of preemption "based on an assumption that had a higher rate been filed, the Commission would have approved it." *Id.* at 573. The Supreme Court rejected that argument outright. "The court below," it explained, "usurped a function that Congress has assigned to a federal regulatory body. This the Supremacy Clause will not permit." *Id.* at 581–82. In the Supreme Court's own words, the lower court's award amounted to nothing more than a decision "based on speculation about what the Commission might have done." *Id.* at 578–79. To permit a court to make its own decisions as to whether certain proposals satisfied the regulations "would undermine the congressional scheme," because the proposal "was never filed with the Commission and thus never found to be reasonable." *Id.* at 579.[28]

More recently, the Supreme Court in held that state law claims alleging that an orthopedic device manufacture defrauded the FDA were conflict preempted by the FDA's own regulations. *Buckman Co. v. Plaintiffs' Legal Comm.*, 531 U.S. 341

[28] *See also Missouri Pacific R. Co. v. Stroud*, 267 U.S. 404, 408 (1925) ("It is elementary and well settled that there can be no divided authority over interstate commerce."); *Chicago & N.W. Transp. Co. v. Kalo Brick & Tile Co.*, 450 U.S. 311, 326 (1981) ("A system under which each State could, through its courts, impose on railroad carriers its own version of reasonable service requirements could hardly be more at odds with the uniformity contemplated by Congress.").

(2001). *Buckman* stands for the proposition that "the relationship between a federal agency and the entity it regulates is inherently federal in character because the relationship originates from, is governed by, and terminates according to federal law." *Id.* at 347. The state claims in *Buckman* were conflict preempted because the federal regulatory scheme "amply empower[ed]" the agency to remedy the complained-of harm *Id.* at 348. Neither does it matter if the parallel regimes exhibit varying levels of "rigor." *Id.* Instead, a state law claim is conflict preempted so long as the corresponding regulations "enable the [agency] to make its statutorily required judgment," while the state claim would "exert an extraneous pull on the scheme established by Congress." *Id.* at 349, 353.

Moreover, the United States submitted an amicus brief in support of Mutual Pharmaceutical in *Bartlett*.[29] Therein, the Government argued that design defect tort claims are strong candidates for conflict preemption, particularly where the agency conducts a rigorous, evidence-based evaluation process. *Id.* at 24–25. "In the face of this elaborate regulatory regime," the Government summarized, "it would be inconsistent . . . to conclude that a manufacturer must abandon a market it has been approved by [an agency] to enter in order to avoid violating a duty recognized by a jury under state law that deems its product unsafe." *Id.* at 27–28.

[29] https://www.americanbar.org/content/dam/aba/publications/supreme_court_preview/briefs-v2/12-142_pet_amcu_usa.authcheckdam.pdf.

According to that same amicus brief, neither is it advisable for lay juries to reconsider an agency's systematic regulatory judgment. "By requiring a jury to independently balance the health risks and benefits of [agency]-approved uses of a [product] and to determine if the [product] is "unreasonably dangerous" for those uses, a State with a pure design-defect product-liability law would force the jury to "second-guess" [agency] safety determination." *Id.* at 28. This is true, the Government suggested, even in cases where federal law "establish[es] merely minimum safety standards," so long as the underlying state tort laws "interfere with the federal balance." *Id.*

In addition to her argument in support of broad-based application of the clear evidence rule, the Plaintiff also has suggested that the FAA regulations are meant only to set minimum standards and that when fifty bodies of tort law begin to diverge from the regulations by, for instance, setting stricter standards than the FAA, such developments are permissible rather than preempted. That argument is unavailing for a number of reasons.

First, as Mr. O'Flanagan explained at oral argument before this Court, despite the terminology, "minimum" standards as contemplated by regulations in life-or-death fields, such as aviation or pharmaceuticals, are set substantially higher than might be the case in other less high-stakes arenas. Indeed, based upon the thorough regulatory regime reviewed earlier, it is difficult to imagine remedial

measures that aircraft manufacturers might take under state law that would exceed those "minimum" standards but would not already be demanded by the FAA's regulations.

Perhaps manufacturers could include, for example, working parachutes and lightning preparedness kits, but even Pennsylvania negligence law only requires a duty of reasonable care, not an absolute one. Indeed, Mr. O'Flanagan's observation is consistent with an earlier remark by the Supreme Court in which it instructed that the words "minimum standards" do not "furnish[ ] a litmus-paper test for resolving issues of preemption." *Ray v. Atlantic Richfield Co.*, 435 U.S. 151, 168 n.19 (1978). In fact, the United States Court of Appeals for the First Circuit, in the parallel context of regulations governing vehicle manufacturers, has previously remarked that this semantic "minimum standards" argument is a red herring, because "[a]lthough the standards are 'minimum' in the sense that a manufacturer may make a vehicle safer than required by federal law, the standards are not 'minimum' in relation to state law." *Wood v. Gen. Motors Corp.*, 865 F.2d 395, 414 (1st Cir. 1988). I also note that excessive focus on a hypothetical state tort law that might fall short of, overlap with, or exceed federal regulations very likely overlooks the key conflict preemption metric gleaned from *Arkla*, *Buckman*, *PLIVA*, and *Bartlett*: whether the regulated entity could independently implement the suggested remedial measure.

Further, courts confronting conflict preemption problems in the context of "minimum standards" regimes necessarily have balanced the benefits of uniform standards with the costs of occasionally disparate ones. *See, e.g.*, *Geier v. American Honda Motor Co.*, 529 U.S. 861 (2000). In such instances, the prevailing consideration is always the extent to which the originating statute "reflects a congressional determination" to permit nonuniformity or whether it evidences "a desire to subject the industry to a single, uniform set of federal safety standards." *Id.* at 871. Certainly, the set of regulations governing such core aspects of aviation as engine structure and maintenance ought to be consistent whether the plane takes off from the keystone state or a bit farther south in the palmetto one. *But see Sprietsma v. Mercury Marine*, 537 U.S. 51 (2002) (declining to find conflict preemption where, quite opposite from this case, the originating statue did "not require the Coast Guard to promulgate comprehensive regulations covering every aspect of recreational boat safety and design" or to "certify the acceptability of every recreational boat subject to its jurisdiction").

As our Court of Appeals has recognized in this matter, "Almost immediately after the airplane became a viable means of transportation, it became clear that certain aspects of aviation, such as air traffic control, required uniform federal oversight." *See Sikkelee*, 822 F.3d at 683–84 (citing Air Commerce Act of 1926, ch. 344, 44 Stat. 568)). *See also City of Burbank v. Lockheed Air Terminal Inc.*,

411 U.S. 624, 639 (1973) ("The interdependence of these factors requires a uniform and exclusive system of federal regulation if the congressional objectives underlying the Federal Aviation Act are to be fulfilled.").[30]

The typical justification for nonuniformity in regulatory cases is that such disparity may assist in adequately compensating accident victims. *See* FAA Ltr. Br. at 12. Federal courts should not contort the law in such a manner as to prioritize compensation over stability of our legal system and the efficient functioning one of our nation's largest industries. "It is unquestioned that [the plaintiff] sustained serious injury, but not all instances of injury automatically lead to an award of damages. Not all accidents are the legal fault of another." *Harlan v.*

---

[30] In her supplemental briefing, Plaintiff also contends that certain "obstacle preemption" cases may not be relevant to my determination. That argument characterizes this matter through much too fine a lens:

> The Court has not previously driven a legal wedge—only a terminological one—between "conflicts" that prevent or frustrate the accomplishment of a federal objective and "conflicts" that make it "impossible" for private parties to comply with both state and federal law. Rather, it has said that both forms of conflicting state law are "nullified" by the Supremacy Clause. . . . We see no grounds, then, for attempting to distinguish among types of federal-state conflict for purposes of analyzing whether such a conflict warrants pre-emption in a particular case.

Geier, 529 U.S. at 873–74.

With that in mind, I note that the Supreme Court has previously construed the conflict preemption analysis as broad as to encompass an inquiry into whether the state law "interferes with the methods by which the federal statute was designed to reach this goal," *Int'l Paper Co. v. Ouellette*, 479 U.S. 481, 494 (1987), and "whether the [agency] has promulgated its own requirement on the subject or has decided that no such requirement should be imposed at all." *United States v. Locke*, 529 U.S. 89, 110 (2000).

Frazier, 635 F. Supp. 718, 723 (W.D. La. 1986), *aff'd*, 811 F.2d 601 (5th Cir. 1987), and *aff'd*, 811 F.2d 601 (5th Cir. 1987).

To be precise, such a strained adherence to the policy goal of compensation would be improper here for a number of reasons. For one, the need to compensate a victim, however admirable, cannot be so forceful as to require modifications that would have required Lycoming to simultaneously violate federal regulations. Perhaps this analysis could be different where the tort modification and the regulations were entirely congruous, but not here. Second, there are certainly other methods of compensation, such as life insurance or worker's compensation, which soften the blow for decedents' families in many aviation accident cases and that make state tort compensation significantly less attractive and necessary relative to nationwide consistency in flight standards. Last, although no amount of money can replace a loved one, it is undisputed that the Plaintiff has already received a $2 million settlement from Kelly, who conducted the 2004 carburetor overhaul.

Accordingly, with the foregoing discussion in mind, there is no genuine dispute of material fact that Lycoming could not independently comply with the FAA regulations and Pennsylvania state tort law. Thus, Plaintiff's tort claims are conflict preempted.

B. There Is No Genuine Dispute Of Material Fact As To Whether The Engine Was Defective When It Left Lycoming's Hands In 1969, Or Alternatively, As To Whether Lycoming Could Have Reasonably Foreseen Introduction Of The Alleged Defect.

Plaintiff contends that Lycoming is liable on both strict liability and negligence grounds. Neither claim survives summary judgment.

1. Strict Liability

In its 2014 decision *Tincher v. Omega Flex, Inc.*, 104 A.3d 328, 335, the Supreme Court of Pennsylvania declined to adopt the Third Restatement of Torts. In doing so, it confirmed that strict liability claims alleging manufacturing defects continue to be governed by § 402A of the Second Restatement. *See id.* at 383.

To prevail on such a claim under § 402A, a plaintiff must prove: (1) that the product was defective, (2) that the defect existed when it left the hands of defendant, and (3) that the defect caused the harm. *Ellis v. Chicago Bridge & Iron Co.*, 545 A.2d 906, 909 (Pa. Super. Ct. 1988). *Accord Barton v. Lowe's Home Centers, Inc.*, 124 A.3d 349, 354 (Pa. Super. Ct. 2015); *Hadar v. AVCO Corp.*, 886 A.2d 225, 228 (Pa. Super. Ct. 2005).

The element primarily at it issue in this case is the second, which Pennsylvania courts have taken verbatim from comment g to § 402A. Indeed, the Supreme Court of Pennsylvania in *Tincher* acknowledged comment g for its "reasoned consideration of factors relevant in Pennsylvania to explain the existence and nature of a seller's duty in tort." 104 A.3d at 383. *See also*

Wojciechowski v. Long-Airdox Div. of Marmon Grp., Inc., 488 F.2d 1111, 1115 (3d Cir. 1973) (Rosenn, J.) ("The Pennsylvania courts have also adopted comment g to Section 402A."); *Forry v. Gulf Oil Corp.*, 237 A.2d 593, 597 (1968) (linking tort plaintiff's burden of proof to comment g).

The requirement that a product be defective when it leaves the seller's hands is "[t]he focus of § 402A." *Eshbach v. W. T. Grant's & Co.*, 481 F.2d 940, 942 (3d Cir. 1973). In fact, that the product "was in the same condition . . . on the day of the accident as it was at the time of sale" is "a critical element" in § 402A cases. *Rooney v. Fed. Press Co.*, 751 F.2d 140, 143 (3d Cir. 1984) (Weis, J.).As such, that provision imposes no liability on manufacturers in a supply chain who precede the defect-causing entity. *Bialek v. Pittsburgh Brewing Co.*, 242 A.2d 231, 236 (1968).

Stated another way, a manufacturer is not liable "if a safe product is made unsafe by subsequent changes," unless it "could have reasonably expected or foreseen such an alteration." *Davis v. Berwind Corp.*, 690 A.2d 186, 190 (1997). This rule rings "particularly true" when the defect "arises from the manner in which the component is utilized by the assembler of the final product." *Jacobini v. V. & O. Press Co.*, 588 A.2d 476, 479 (1991).

If subsequent alterations were not reasonably foreseeable when the product entered the stream of commerce, the manufacturer is entitled to summary judgment

as a matter of law. *Myers v. Triad Controls, Inc.*, 720 A.2d 134, 135 (Pa. Super. Ct. 1998). This rule confirms that "[a] manufacturer is a guarantor of its product, not an insurer," and therefore, "it is not the purpose of § 402A to impose *absolute* liability." *Davis*, 690 A.2d at 190 (emphasis added).

These principles compel two inquiries: Was the engine defective when it left Lycoming's hands in the summer of 1969? And, alternatively, could Lycoming have reasonably foreseen introduction of the alleged defect? The answers to both questions ensure that summary judgment is appropriate.

The first question, whether the engine was defective in 1969, is more easily answered. In fact, Judge Jones granted summary judgment on this precise point. In his July 2012 Memorandum Opinion, Judge Jones wrote that Plaintiff "has offered no evidence . . . demonstrating that the engine was defective when it left the Lycoming's . . . plant in 1969." ECF No. 299 at 13. Plaintiff's counsel, David I. Katzman, Esquire, later conceded as much during the November 2013 evidentiary hearing before this Court:

> Mr. Katzman: In 1969 when you are selling it to Beagle, who doesn't make 172 airplanes, I agree, I couldn't prove it was defective at that point.

Nov. 2013 Tr. at 218:20–22.

A common-sense reading of the facts supports this conclusion. From its distribution in 1969 until 1998, the subject engine was not installed or used in

flight. No one, not even Lycoming, knows where the engine was during that time period or in what storage quality it was maintained. After its 1998 removal from that period of long-term storage, the engine only flew for 12 hours before maintenance was required. The engine then accumulated 6 years and 1,200 hours of problem-free flight between 1998 and 2004. In August 2004, the aircraft was struck by lightning, and the carburetor was completely overhauled by Kelly, who replaced it with conglomerate aftermarket parts. Less than 1 year and 400 flight hours later, the crash occurred. For all of these reasons, the dispositive issue is not whether the engine was defective in 1969 but whether Lycoming could reasonably have foreseen introduction of the allegedly defective carburetor in 2004. It could not have done so.

Summary judgment may be granted where the facts make it "so clear" that the manufacturer could not have foreseen eventual changes. *Davis v. Berwind Corp.*, 640 A.2d 1289, 1297 (Pa. Super. Ct.1994), *aff'd*, 690 A.2d 186 (1997). For instance, summary judgment is appropriate when the alteration may be "a supervening or intervening cause" of the accident. *Davis*, 640 A.2d at 1297. In that vein, foreseeability of a subsequent change "is part and parcel of a causation analysis." *Eck v. Powermatic Houdaille, Div. of Houdaille Indus., Inc.*, 527 A.2d 1012, 1020 (Pa. Super. Ct. 1987). "Notably, an alteration that can be reasonably anticipated is still a 'substantial change' within the meaning of § 402A if it is

negligently or improperly implemented." *Fisher v. Walsh Parts & Serv. Co.*, 296 F. Supp. 2d 551, 563 (E.D. Pa. 2003) (citing *Kuisis v. Baldwin–Lima–Hamilton Corp.*, 319 A.2d 914, 922 n. 15 (Pa. 1974)).

This determination is made retrospectively, "by looking back from the harm or injury and tracing the sequence of events by which it was produced . . . in light of surrounding circumstances that existed at the time of the accident." *Wilson v. Am. Chain & Cable Co.*, 364 F.2d 558, 561 (3d Cir. 1966). Changes "too remote to require reasonable prevision need not be anticipated." *Speyer, Inc. v. Humble Oil & Ref. Co.*, 403 F.2d 766, 771 (3d Cir. 1968) (Aldisert, J.) (quoting *Brady v. Southern Ry. Co.*, 320 U.S. 476, 483 (1943)).

An illustrative decision is that of the United States District Court for the Eastern District of Pennsylvania in *Fisher v. Walsh Parts & Serv. Co.* That case involved a metal press whose safety assembly bolts "had come loose" and had "backed out . . . so as to create a gap." 296 F. Supp. 2d 551, 557 (E.D. Pa. 2003). The path that the press had taken to get to its ultimate user was, like that of the engine here, a winding one. In particular, the press was sold in 1976, additional parts were supplied to the same buyer three years later, no one could tell from the records what had happened to the machine from 1979 through 1987, the press was purchased by the end user in 1987, and the accident occurred in 1999. *Id.* at 556. During that time, the press underwent at least four repairs. *Id.*

Speaking mechanically, the safety assembly on the press in *Fisher* consisted of a bracket held on the cast iron frame with two hex bolts. *Id.* at 555. The hex bolts were secured by lock washers and safety wiring. *Id.* Two of the known repairs involved removal of the safety assembly and replacement of one of its original connecting pieces with a rigidly-mounted, substitute two-piece part. *Id.* at 556. After the safety assembly malfunctioned and an employee was severely maimed, a post-accident inspection revealed that the safety assembly had separated from the frame, a likely consequence of loosened bolts conditioned by the rigid replacement fixture as well as missing washers and wire. *Id.* at 564.

The court held that these alterations amounted to substantial changes unforeseeable by the original manufacturer in 1976. *Id.* at 565. In particular, it concluded that repairs requiring the assembly's removal and overhaul were not foreseeable. *Id.* Still, the court went further, noting that judgment was appropriate on the independent ground that even if the changes were foreseeable, it was not foreseeable that they would have been performed incorrectly in a manner inconsistent with the assembly's initial design and components. *Id.* Thus, the court concluded that, in light of these modifications, it could not "lay blame on the shoulders" of the initial manufacturer. *Id.* at 568.

More recently, in *Schwartz v. Abex Corp.*, 106 F. Supp. 3d 626 (E.D. Pa. 2015), the United States District Court for the Eastern District of Pennsylvania

confronted the question of whether, under Pennsylvania law, a manufacturer could be liable on a strict liability theory for components part that it neither manufactured nor supplied but were nevertheless used within its product. The court held that Pennsylvania law does not support such a theory. *Id.* at 628.

The plaintiff in *Schwartz* was an airplane propeller mechanic and crew chief at two Pennsylvania Air Force bases. *Id.* at 629. The defendant manufactured airplane engines that used external insulation containing asbestos. *Id.* It was undisputed that the airplane engine manufacturer did not manufacture or supply the component part at issue. *Id.* This was an important concession, as the court ultimately held that the term "product" under § 402A does not embrace "an aftermarket component part." *Id.* at 653. This holding stemmed from the established principle that a manufacturer cannot be strictly liable "for a product it neither manufactured nor supplied." *Id.* (quoting *Schaffner v. Aesys Techs., LLC*, No. 1901 EDA 2008, 2010 WL 605275, at *5 (Pa. Super. Ct. Jan. 21, 2010)).

Just as importantly, the court concluded that, "*as a matter of law*, replacement of original component parts (and/or addition of a component part . . .) constitutes a 'substantial change' to the manufacturer's product, for purposes of strict liability." *Schwartz*, 106 F. Supp. 3d at 653 (emphasis added). Accordingly, the airplane engine manufacturer was entitled to summary judgment because "a

manufacturer is never strictly liable for injury caused by . . . aftermarket component parts." *Id.* at 664.

Similarly, in *Reese v. Ford Motor Co.*, No. CIV.A. 09-2948, 2011 WL 4572027 (E.D. Pa. Oct. 4, 2011), the United States District Court for the Eastern District of Pennsylvania granted summary judgment in favor of an automaker where "aftermarket parts" caused a vehicle fire. The court in *Reese* accepted expert testimony that the aftermarket wiring was installed after the automobile left manufacturer's possession. *Id.* at *2. The plaintiffs nevertheless attempted to hold the automaker strictly liable on the theory that installation of the aftermarket wiring was foreseeable. *Id.* at *5. The court rejected that argument, reasoning that installation of aftermarket wiring was not foreseeable, even if such installation was made by one of the manufacturer's authorized dealers. *Id.*

These recent decisions flow from a line of established precedent. *See Speyer, Inc. v. Humble Oil & Ref. Co.*, 403 F.2d 766, 771 (3d Cir. 1968) (Aldisert, J.) (affirming entry of judgment on substantial change grounds where replacement hose made of different material was installed on gas pump 9 years after sale); *Southwire Co. v. Beloit E. Corp.*, 370 F. Supp. 842, 858 (E.D. Pa. 1974) (Becker, J.) (granting judgment in favor of manufacturer where product's failure was attributable not to "self-contained . . . defect unreasonably dangerous at the time it left [the manufacturer]," but "to the changes that were made in it by the

counterweight welding"); *Merriweather v. E. W. Bliss Co.*, 636 F.2d 42, 43 (3d Cir. 1980) (substantial change defense applicable where switch that powered machine was "removed," and machine was "equipped" with new controls); *Hanlon v. Cyril Bath Co.*, 541 F.2d 343, 345 (3d Cir. 1975) (directed verdict warranted because "substitution" of "electrical starting device" for original starter was substantial change not reasonably foreseeable 17 years before accident at time of sale).

These authorities point toward a singular conclusion: in 1969, Lycoming could not foresee the substantial modifications its engine would ultimately undergo before the subject accident 36 years later. This lapse of time alone is enough to warrant a grant of summary judgment. *See Gumbs v. Int'l Harvester, Inc.*, 718 F.2d 88, 94 (3d Cir. 1983) (confirming that the key period in allegedly defective product's life cycle is "the time that it left the hands of the particular seller"); *Oquendo v. Bettcher Indus., Inc.*, 939 F. Supp. 357, 363 (D.N.J. 1996), *aff'd*, 118 F.3d 1577 (3d Cir. 1997) (granting summary judgment where manufacturer "only learned of [component's] removal post-manufacture" because "the relevant time period . . . is the time of design and fabrication").

In particular, Plaintiff took no issue with Lycoming's emphasis on the 12-year overhaul period when I asked at oral argument about the extent to which aircraft engines were durable or nondurable goods. As it were, the aircraft engine

here should have been overhauled three times in 12-year cycles during the 36-year timeframe after its sale. This is problematic in two ways. First, it indicates that the engine was subjected to a maintenance schedule contrary to Lycoming's best practices and therefore reached the end user in an unforeseen manner. Second, it plainly suggests that the delay in maintenance was potentially an intervening cause of the engine's alleged decline in airworthiness.

Further, the extreme extent of the modification here and the tortured life cycle of this particular engine also warrant the entry of summary judgment. In addition to obvious factors such as the physical or mechanistic breadth of a modification that tend to make it a substantial one, courts also look to whether it could "be reasonably anticipated." *Fisher*, 296 F. Supp. 2d at 563. *See also Harsh v. Petroll*, 840 A.2d 404, 421 (Pa. Commw. Ct. 2003), *aff'd*, 887 A.2d 209 (2005) (considering "extent of the effect of the modifications").

Here, the post-shipment modifications were not only extensive but they were also not objectively foreseeable. After a nearly 30-year period of storage, the engine was installed in an aircraft that did not even exist and for which it was not type certificated at the time of manufacture. After being struck by lightning, the engine and the carburetor were both completely overhauled. Recall that under 14 C.F.R. § 43.2, "overhaul" is a regulatory term of art, encompassing the entire process by which a component, using methods, techniques, and practices

acceptable to the FAA, has been disassembled, cleaned, inspected, repaired as necessary, and reassembled. During that process, the engine was removed from the aircraft, and the carburetor was removed from the engine. The carburetor was overhauled using Kelly's third-party aftermarket parts. In fact, recall that experts in this matter believe that the two core carburetor components were likely aftermarket replacement parts from two different decades, melded together to create one finished unit. That alone, in my view, is sufficiently extreme to warrant summary judgment in light of the preceding case law. By that stage, Lycoming was simply not the kind of seller § 402A is meant to reach.

Plaintiff's primary counterargument is that Lycoming can still be held liable for the aftermarket modifications, given that Kelly purports to have followed one of Lycoming's general service bulletins and maintenance manuals. That argument illustrates full well a strand of fallacious reasoning that I believe permeates Plaintiff's position: this is an exceptionally complex matter that cannot properly be resolved by resorting to vague generalities. In particular, the focus of this case has far too often been upon whether type certificate holders *generally* may be liable for aftermarket part installations, or whether those same manufacturers *generally* may be liable if they issue repair manuals and things go wrong. Of course the answer those questions is yes. But, this matter has long since progressed beyond general principles of products liability law. The question now is whether under the *specific*

circumstances at issue, tort liability may still lie. *See Berckeley Inv. Grp., Ltd. v. Colkitt*, 455 F.3d 195, 201 (3d Cir. 2006) ("In this respect, summary judgment is essentially 'put up or shut up' time for the non-moving party.").

"[N]othing precludes a court from determining proximate cause as a matter of law if a jury could not reasonably differ on the issue." *Chetty Holdings Inc. v. NorthMarq Capital, LLC*, 556 F. App'x 118, 121 (3d Cir. 2014) (Fisher, J.) "To put it another way, where there is no issue of fact, the issue of proximate cause is one for the court to determine as a matter of law." *Heeter v. Honeywell Int'l, Inc.*, 195 F. Supp. 3d 753, 758 (E.D. Pa. 2016), *aff'd* 2017 WL 3128488 (3d Cir. July 24, 2017). While every case turns on its facts, these general instructional material do not create a genuine dispute of material fact warranting the denial of summary judgment here.

Indeed, having previously read at length in Plaintiff's briefs about the purportedly decisive nature of the contested service bulletin, known as Service Bulletin 366, it was rather disappointing to lay eyes on it once again on remand. Its potency in this litigation, like that of a monstrous shadow emanating from a much smaller, harmless source, quickly dissipates upon closer inspection. Recall that the bulletin was broadly issued in 1973 to any and all parts manufacturers or end users who might be responsible for securing maintenance on "All AVCO Lycoming

engines equipped with Marvel-Schebler carburetors." In fact, it consists of three short paragraphs, together approximately one-half page in length.

The Bulletin is written generally and provides no direct guidance for the particular parts or methods eventually employed 31 years later by Kelly. Instead it merely notifies recipients that if leaking is evident or the screws are loose, the carburetor may be disassembled so that the gasket may be replaced and the screws retightened. It makes no mention of the specific types of components or the designs that should be used when an aftermarket parts manufacturer seeks a PMA pertaining to the carburetor. Of course, the service bulletin is also silent as to the type of conglomerate overhaul that Kelly undertook. Plaintiff's argument as to this service bulletin is therefore flawed in several respects: it cannot be said that the bulletin addresses the entirety of the carburetor maintenance performed during the overhaul; the bulletin is intended for engines that have been maintained using best practices; no reasonable person could find that Kelly faithfully followed the bulletin when it implanted the conglomerate carburetor; and Plaintiff has not shown that further instructional information on Lycoming's part would have materially altered Kelly's future design choices or maintenance decisions.[31]

[31] The same is true of certain letters Lycoming may have received from the FAA in the early 1970s regarding perceived defects in the engine. As Ms. Slavin rightly pointed out at oral argument, those concerns must have been *de minimis*, as the Administration continued approving Lycoming's same designs at that time and continuing for a period of at least 20 more years. May 2017 Tr. 44:07–17. Of course, the FAA also approved Kelly's PMA that used an imitation design similar to the one about which Plaintiff now complains. Generic

The thrust of this Memorandum Opinion does not mean to say that type certificate holders can never be liable for aftermarket work or that instructional manuals will never give rise to liability. To the contrary, the crux of this portion of my discussion is rather narrow: when an engine is lost, stored, overhauled, and the allegedly defective part has been entirely replaced with a suspect knock-off, liability simply cannot lie. This is not the type of case that § 402A is intended to reach. In fact, if this judgment cannot be entered here as a matter of law, it is hard to imagine what other scenarios would absolve manufacturers. Summary judgment is not limited to the fanciful scenario in which a midnight burglar penetrates the air hangers and meddles with the Cessna aircrafts. Rather, at some point, the tortuous life cycle of a product necessarily snuffs out any remaining liability early manufacturers once had. The engine here has undoubtedly passed that point.

2. Negligence

My analysis as to Plaintiff's negligence claims does not repeat, though it certainly rhymes with that above. "Proximate causation is a necessary element in proving a tort case under theories of strict liability or negligence." *Van Buskirk v. Carey Canadian Mines, Ltd.*, 760 F.2d 481, 492 (3d Cir. 1985) (Adams, J.) (citing *Sherk v. Daisy-Heddon*, 450 A.2d 615, 617 (Pa. 1982). Accordingly, the causal

---

recitations pertaining to foreseeability are inadequate at this stage of such a complex case as this one.

inquiry is "inescapable" in negligence and strict liability cases where subsequent modifications are at issue. *Van Buskirk*, 760 F.2d at 495 n.11.

"In *Tincher*, the Pennsylvania Supreme Court noted that the standard for establishing a strict liability claim in Pennsylvania is designed to be more easily satisfied than that for a negligence claim." *Schwartz v. Abex Corp.*, 106 F. Supp. 3d 626, 654 (E.D. Pa. 2015). "Pursuant to the guidance of the Pennsylvania Supreme Court, the standard for establishing liability of a product manufacturer under a negligence theory would be more stringent and, thus, more difficult to satisfy." *Id.*

"In order to show negligent design and negligent manufacture under Pennsylvania law, plaintiff must show that (1) the manufacturer owned a duty to the plaintiff, (2) the duty was breached and (3) such a breach was the proximate cause of plaintiff's injuries." *Soufflas v. Zimmer, Inc.*, 474 F. Supp. 2d 737, 753 (E.D. Pa. 2007) (citing *Phillips v. Cricket Lighters*, 841 A.2d 1000, 1008 (Pa. 2003); *Dauphin Deposit Bank & Trust v. Toyota*, 596 A.2d 845, 849–50 (Pa. Super. Ct. 1991). Further, "a claim for negligence under a failure-to-warn theory in products liability requires showing, unlike in a strict products liability claim, that the manufacturer was at fault" and that "the absence or inadequacy of the warnings was the factual or proximate cause of the injury." *Wright v. Ryobi Techs., Inc*, 175 F. Supp. 3d 439, 454–55 (E.D. Pa. 2016) (citing *Dauphin Deposit Bank & Tr. Co.*

v. Toyota Motor Corp., 596 A.2d 845, 849–50 (Pa. Super. Ct. 1991); *Moroney v. General Motors Corp.*, 850 A.2d 629, 633–34 (Pa. Super. Ct. 2004).

"A proximate, or legal cause, is defined as a substantial contributing factor in bringing about the harm in question." *Van Buskirk*, 760 F.2d at 492. "Pennsylvania courts utilize the 'substantial factor' test from the Restatement (Second) of Torts to ascertain proximate cause." *Heeter*, 195 F. Supp. 3d at 758. "The following considerations are deemed important under the Restatement's 'substantial factor' test to determine proximate cause: (1) the number of factors other than the actor's conduct that contributed to producing the harm and the extent of their contribution; (2) whether the actor's conduct created a force or series of forces that were in continuous and active operation up to the time of the harm, or created a situation harmless unless acted upon by other forces for which the actor is not responsible; and (3) the lapse of time between the actor's conduct and the harm." *Id.* at 759. "The questions of proximate cause and superseding cause are intended to further the same ultimate inquiry: how far should legal responsibility extend?" *Van Buskirk*, 760 F.2d at 495.

Thus, proximate causation as to negligence is further called into question based upon Kelly's own independent aftermarket actions. Recall that Kelly did not obtain its PMA by tying its approval strictly to that of Lycoming's through an identicality submission. To the contrary, Kelly submitted its own tests and

computations. To that end, the record reveals that the new parts installed during the carburetor overhaul all were Kelly parts. ECF No. 524 ¶¶ 4, 5, 7). The part numbers for the various new replacement carburetor parts contain the letters CF—for Consolidated Fuel Systems (an entity related to Kelly), and the data tag installed on the overhauled carburetor contains the letters KA—for Kelly Aerospace. *Id.* ¶¶ 7, 9.

Further, the foregoing analysis as to the time that elapsed since the engine left Lycoming's hands, as well as to the extent of the modification, is just as applicable to proximate cause analysis in the negligence context as it is to strict liability. However, negligence is distinct from strict liability—indeed, a more difficult cause of action upon which to succeed—because negligence requires something that strict liability does not: breach of a duty of *reasonable* care.

If Plaintiff's strict liability claims fail, and they undoubtedly should, it would be highly inadvisable to shoehorn these facts into a negligence cause of action. That, it seems to me, would amount to the imposition of a duty of *absolute* care. In my view, Plaintiff has not articulated what precise duty Lycoming breached and what precise remedial measures Lycoming could have taken that would have altered the eventual outcome. That Lycoming should have stopped selling

carburetors altogether or should have had omniscient foresight in 1969 are impermissible suggestions incongruous with the concept of reasonableness.[32]

Last, as the preceding authority makes clear, manufacturers are not insurers. Expansive liability for entities in a supply chain is recognized precisely so that plaintiffs are not foreclosed from recovering just because one manufacturer or seller may be illiquid. In that case, liability may reach proximate comparators. What that form of supply chain liability does not do in negligence cases, however, is stretch into space and time *ad infinitum*. That converts the Commonwealth's negligence law into a beast that it is not.

For these reasons, Lycoming is entitled to summary judgment on this second, independent ground.

IV. CONCLUSION

At this point in conflict preemption opinions, the court typically laments "the unfortunate hand that federal [ ] regulation has dealt" the plaintiff. *PLIVA*, 564 U.S. at 625. As her $2 million settlement evidences, such sympathy for unrealized

---

[32] In my view, Plaintiff's negligence claims would also fail when viewed through the lens of Pennsylvania's "*Althaus* test" for discerning, as a matter of law, whether a duty in tort exists. That test requires consideration of: (1) the relationships between the parties; (2) the social utility of the defendant's conduct; (3) the nature of the risk imposed and foreseeability of the harm incurred; (4) the consequences of imposing a duty upon the defendant; and (5) the overall public interest in the proposed solution. *See Althaus v. Cohen*, 756 A.2d 1166, 1169 (Pa. 2000). Straining to find liability in the present case would leave these factors entirely uncalibrated in that it would impose significant costs and uncertainty on aircraft manufacturers (and ultimately consumers and shareholders), solely to pay for the injuries of an individual who has already been compensated and whose connection to the manufacturer was slight and destroyed by several intervening events.

pecuniary losses is not in order for the Plaintiff here. As Ms. Slavin expressed at oral argument, "Kelly's hands placed the carburetor into the stream of commerce, and Mrs. Sikkelee . . . recovered $2 million. So everything that *Tincher* says should happen did happen as to the actual seller or supplier." May 2017 Tr. at 19:08–12. I agree.

An appropriate Order follows.

BY THE COURT:

s/ Matthew W. Brann
Matthew W. Brann
United States District Judge

IN THE UNITED STATES DISTRICT COURT
FOR THE MIDDLE DISTRICT OF PENNSYLVANIA

JILL SIKKELEE, Individually and as Personal Representative of the ESTATE OF DAVID SIKKELEE, deceased,	:	No. 4:07-CV-00886
	:	(Judge Brann)
Plaintiff,	:	
v.	:	
AVCO CORPORATION, *et al.*,	:	
Defendants.	:	

ORDER

AND NOW, this 3rd day of August 2017, in accordance with the accompanying Memorandum Opinion, **IT IS HEREBY ORDERED** that:

1. Lycoming's Motion for Summary Judgment on the Ground of Conflict Preemption, ECF No. 532, is **GRANTED**;
2. Lycoming's Motion for Summary Judgment in light of *Tincher v. Omega Flex*, ECF No. 523 is **GRANTED**;
3. The Clerk of Court is directed to **DEFER** the entry of judgment until final resolution of this litigation, because this Order "adjudicates fewer than all the claims or the rights and liabilities of fewer than all the parties," pursuant to Federal Rule of Civil Procedure 54(b).

BY THE COURT:

s/ Matthew W. Brann
Matthew W. Brann
United States District Judge

IN THE UNITED STATES DISTRICT COURT
FOR THE MIDDLE DISTRICT OF PENNSYLVANIA

JILL SIKKELEE, Individually and as Personal Representative of the ESTATE OF DAVID SIKKELEE, deceased,	:	No. 4:07-CV-00886
	:	(Judge Brann)
Plaintiff,	:	
v.	:	
AVCO CORPORATION, *et al.*,	:	
Defendants.	:	

ORDER

AUGUST 3, 2017

Defendant has filed a motion to reconsider my earlier decision as to the survival of Plaintiff's 14 C.F.R. § 21.3 claim. That Section provides in pertinent part as follows, with my emphasis added:

> **§ 21.3 Reporting of Failures, Malfunctions, and Defects.**
>
> (a) The holder of a type certificate (including amended or supplemental type certificates), a PMA, or a TSO authorization, or the licensee of a type certificate must report any failure, malfunction, or defect in any product or article ***manufactured by it*** that it determines has resulted in any of the occurrences listed in paragraph (c) of this section.
>
> (b) The holder of a type certificate (including amended or supplemental type certificates), a PMA, or a TSO authorization, or the licensee of a type certificate must report any defect in any product or article ***manufactured by it*** that has left its quality

system and that it determines could result in any of the occurrences listed in paragraph (c) of this section.

(c) The following occurrences must be reported as provided in paragraphs (a) and (b) of this section:

(1) Fires caused by a system or equipment failure, malfunction, or defect.

(2) An engine exhaust system failure, malfunction, or defect which causes damage to the engine, adjacent aircraft structure, equipment, or components.

(3) The accumulation or circulation of toxic or noxious gases in the crew compartment or passenger cabin.

(4) A malfunction, failure, or defect of a propeller control system.

(5) A propeller or rotorcraft hub or blade structural failure.

(6) Flammable fluid leakage in areas where an ignition source normally exists.

(7) A brake system failure caused by structural or material failure during operation.

(8) A significant aircraft primary structural defect or failure caused by any autogenous condition (fatigue, understrength, corrosion, etc.).

(9) Any abnormal vibration or buffeting caused by a structural or system malfunction, defect, or failure.

(10) An engine failure.

(11) Any structural or flight control system malfunction, defect, or failure which causes an interference with normal control of the aircraft for which derogates the flying qualities.

(12) A complete loss of more than one electrical power generating system or hydraulic power system during a given operation of the aircraft.

(13) A failure or malfunction of more than one attitude, airspeed, or altitude instrument during a given operation of the aircraft.

(d) The requirements of paragraph (a) of this section ***do not apply to***—

(1) Failures, malfunctions, or defects that the holder of a type certificate (including amended or supplemental type certificates), PMA, TSO authorization, or the licensee of a type certificate determines—

(i) ***Were caused by improper maintenance or use***;

(ii) Were reported to the FAA by another person under this chapter; or

(iii) Were reported under the accident reporting provisions of 49 CFR part 830 of the regulations of the National Transportation Safety Board.

(2) Failures, malfunctions, or defects in products or articles—

(i) Manufactured by a foreign manufacturer under a U.S. type certificate issued under § 21.29 or under an approval issued under § 21.621; or

(ii) Exported to the United States under § 21.502.

To prevail on a claim under § 21.3, Plaintiff must prove (1) Lycoming determined a defect in the MA-4SPA created safety risks; (2) that such defect caused the crash; and (3) that the FAA would have responded to Lycoming's § 21.3 reports . . . by ordering changes to the carburetor's design or otherwise

taking action that would have prevented the accident. *Sikkelee v. Precision Airmotive Corp.*, 45 F. Supp. 3d 431, 459 (M.D. Pa. 2014).

"By its plain terms, § 21.3(a) applies only to a type certificate holder that *also* manufactured the subject product or part that is determined to be defective." *Dalrymple ex rel. Dalrymple v. Fairchild Aircraft Inc.*, 575 F. Supp. 2d 790, 797 (S.D. Tex. 2008). *See also* a *Bain ex rel. Bain v. Honeywell Int'l, Inc.*, 167 F. Supp. 2d 932, 939 (E.D. Tex. 2001) ("Bell admits that it holds the type certificate for model 206 helicopters, however, it offers undisputed evidence showing that it is not the type certificate holder for the engine and fuel control unit implicated in the accident involving Bain."); *Hasler Aviation, L.L.C. v. Aircenter, Inc.*, No. 1:06-CV-180, 2007 WL 2263171, at *5 (E.D. Tenn. Aug. 3, 2007) ("Again, here the standard of care under 14 C.F.R. § 21.3(a) is imposed as a duty on the type certificate holder in relation to a product 'manufactured by it.' If Plaintiff does not establish these elements, Plaintiff cannot support a negligence per se claim.").

As set forth more fully in the in accompanying Memorandum Opinion issued on this date, the allegedly defective carburetor was manufactured by Kelly using third-party aftermarket parts. Such manufacturing and installation occurred in connection with the 2004 overhaul of the subject aircraft's engine. Plaintiff does not dispute that. Thus, the regulation's requirement that the allegedly defective

article be "manufactured by" the defendant is not met here. For that reason alone, liability under § 21.3 is improper.

The regulation also excludes from liability alleged defects "caused by improper maintenance or use," which exception is met here at least three times over: once for the conglomerate carburetor that was installed, twice for the unusually lengthy three decades of storage, and thrice for missed overhaul periodicity.

Separately, Plaintiff has failed to show that the FAA would have responded to the allegedly dilatory § 21.3 reports. To the contrary, the record, as set forth in the accompanying Memorandum Opinion, shows that the FAA likely was aware of what the Plaintiff suggests constituted a design defect in the subject carburetor but nevertheless continued to approve Lycoming's design and a separate third-party PMA for years thereafter.

Last, as discussed in the accompanying Memorandum Opinion, Plaintiff has failed to show that the alleged defect or the alleged failure to report the alleged defect was the proximate cause of her decedent's injuries. To the contrary, no reasonable juror could find as much on the facts of this case. "[N]othing precludes a court from determining proximate cause as a matter of law if a jury could not reasonably differ on the issue." *Chetty Holdings Inc. v. NorthMarq Capital, LLC*, 556 F. App'x 118, 121 (3d Cir. 2014) (Fisher, J.) "To put it another way, where

there is no issue of fact, the issue of proximate cause is one for the court to determine as a matter of law." *Heeter v. Honeywell Int'l, Inc.*, 195 F. Supp. 3d 753, 758 (E.D. Pa. 2016), *aff'd* 2017 WL 3128488 (3d Cir. July 24, 2017).

"The purpose of a motion for reconsideration is to correct manifest errors of law or fact or to present newly discovered evidence." *Harsco Corp. v. Zlotnicki*, 779 F.2d 906, 909 (3d Cir. 1985) (Rosenn, J.). In light of the foregoing and the accompanying Memorandum Opinion, my earlier denial of summary judgment was erroneous, and I take the opportunity to correct that oversight today.

AND NOW, THEREFORE, IT IS HEREBY ORDERED that Lycoming's Motion for Reconsideration as to Plaintiff's § 21.3 claim, ECF No. 497, is **GRANTED**.

BY THE COURT:

s/ Matthew W. Brann
Matthew W. Brann
United States District Judge

AO 450 (Rev. 11/11) Judgment in a Civil Action

UNITED STATES DISTRICT COURT

for the

Middle District of Pennsylvania

JILL SIKKELEE *Plaintiff* v. PRECISION AIRMOTIVE CORPORATION, et al *Defendant*	)))))	Civil Action No. 4:07-CV-0886

JUDGMENT IN A CIVIL ACTION

The court has ordered that *(check one)*:

☐ the plaintiff *(name)* _____ recover from the defendant *(name)* _____ the amount of _____ dollars ($ _____), which includes prejudgment interest at the rate of _____ %, plus post judgment interest at the rate of _____ % per annum, along with costs.

☐ the plaintiff recover nothing, the action be dismissed on the merits, and the defendant *(name)* _____ recover costs from the plaintiff *(name)* _____ .

☑ other: Final Judgment is entered in favor of Defendants, Avco Corporation and Textron Lycoming Reciprocating Engine Division, and against Plaintiff in accordance with this Court's Memorandum and Order dated August 3, 2017, ECF No. 565 and 566.

This action was *(check one)*:

☐ tried by a jury with Judge _____ presiding, and the jury has rendered a verdict.

☐ tried by Judge _____ without a jury and the above decision was reached.

☑ decided by Judge Matthew W. Brann on a motion for

Summary Judgment on the Ground of Conflict Preemption [ECF No. 532] and Motion for Summary Judgment in light of *Tincher v. Omega Flex* [ECF No. 523].

Date: August 31, 2017

CLERK OF COURT

Janet R Noone

Signature of Clerk or Deputy Clerk

IN THE UNITED STATES DISTRICT COURT
FOR THE MIDDLE DISTRICT OF PENNSYLVANIA

JILL SIKKELEE, Individually and as Personal Representative of the ESTATE OF DAVID SIKKELEE, Deceased,	:	Case No. 4:07-cv-00886-MWB
Plaintiff	:	(The Honorable Matthew W. Brann)
v.	:	Complaint Filed: May 16, 2007
PRECISION AIRMOTIVE CORPORATION, et al.,	:	
Defendants	:	

NOTICE OF APPEAL

PLEASE TAKE NOTICE that Plaintiff hereby appeals to the United States Court of Appeals for the Third Circuit from the Final Judgment entered on August 31, 2017 (Doc. 570) and Orders (Docs. 299, 566, 567) granting summary judgment to Defendant Avco Corporation and Textron Lycoming Reciprocating Engine Division, a Division of Avco Corporation; and from all previous rulings in this action involving Defendant Avco Corporation and Textron Lycoming Reciprocating Engine Division, a Division of Avco Corporation.

Respectfully submitted this 12th day of September, 2017.

KATZMAN, LAMPERT & MCCLUNE

/s/ John D. McClune

David I. Katzman, pro hac vice (MI 39886)
John D. McClune, pro hac vice (MI 51948)
100 W. Big Beaver Road, Suite 130
Troy, Michigan 48084
Telephone: (248) 258-4800
Facsimile: (248) 258-2825
dkatzman@klm-law.com
jmcclune@klm-law.com

and

RIEDERS, TRAVIS, HUMPHREY, HARRIS,
WATERS & WAFFENSCHMIDT
Clifford A. Rieders, Esq.
Local counsel for Plaintiff
161 West Third Street
P.O. Box 215
Williamsport, PA 17703-0215
(570) 323-8711 Telephone
(570) 323-4192 Fax
lawoffices@riederstravis.com

Attorneys for Plaintiff

CERTIFICATE OF SERVICE

I hereby certify that on this 12th day of September, 2017, I electronically filed the foregoing with the Clerk of the Court using the CM/ECF system which will send a notification of such filing to the all CM/ECF participants.

/s/ John D. McClune
John D. McClune, pro hac vice (MI 51948)
100 W. Big Beaver Road, Suite 130
Troy, Michigan 48084
Telephone: (248) 258-4800
Facsimile: (248) 258-2825
jmcclune@klm-law.com

CERTIFICATE OF SERVICE

I hereby certify that on January 26, 2018, I electronically filed the foregoing with the Clerk of Court for the United States Court of Appeals for the Third Circuit by using the appellate CM/ECF system. All participants in the case are registered CM/ECF users, and service will be accomplished by the appellate CM/ECF system.

/s/ Tejinder Singh
Tejinder Singh
GOLDSTEIN & RUSSELL, P.C.
7475 Wisconsin Ave., Ste. 850
Bethesda, MD 20814
(202) 362-0636

Counsel for Appellant